ELECTRICAL SYMBOL LIST

NOTE: This is a standard symbol list and not all items listed may be used.

Abbreviations

AFC	ABOVE FINISHED CEILING
AFF	ABOVE FINISHED FLOOR
AFG	ABOVE FINISHED GRADE
ARF	ABOVE RAISED FLOOR
ANSI	AMERICAN NATIONAL STANDARDS INSTITUTE
AWG	AMERICAN WIRE GAUGE
A	AMPERES, AMBER
AV	AUDIO VISUAL
AHJ	AUTHORITY HAVING JURISDICTION
AIC	AVAILABLE INTERRUPTING CAPACITY
BAS	BUILDING AUTOMATION SYSTEM
CA	CABLE
CAT	CATEGORY
CLG	CEILING
CB	CIRCUIT BREAKER
C	CONDUIT, CLOSE, CONTROL
CFCI	CONTRACTOR FURNISHED CONTRACTOR INSTALLED
CFOI	CONTRACTOR FURNISHED OWNER INSTALLED
COORD	COORDINATE
CU	COPPER
dB	DECIBEL
(X)	DEMOLISH
DTL	DETAIL
DIA	DIAMETER
DIM	DIMENSION
DIV	DIVISION
DN	DOWN
DWG	DRAWING
EA	EACH
EMT	ELECTRICAL METALLIC TUBING
ENT	ELECTRICAL NON-METALLIC TUBING
ESD	ELECTROSTATIC DISCHARGE
EL	ELEVATION
E	EMERGENCY
EF	EXHAUST FAN
(E)	EXISTING
FMS	FACILITY MANAGEMENT SYSTEMS
FF	FINISH FLOOR
FA	FIRE ALARM
FACP	FIRE ALARM CONTROL PANEL
FMC	FLEXIBLE METAL CONDUIT
FT	FOOT, FEET
FBO	FURNISHED BY OTHERS
G, GND	GROUND
GFCI	GROUND FAULT CIRCUIT INTERRUPTER
GFI	GROUND FAULT INTERRUPTER
GFP	GROUND FAULT PROTECTION
GE	GROUNDING EQUALIZER
HH	HANDHOLE
HT	HEIGHT
HC	HORIZONTAL CROSS CONNECT
ID	IDENTIFICATION
IN	INCH, INCHES
IEEE	INSTITUTE OF ELECTRICAL AND ELECTRONICS ENGINEERS
IMC	INTERMEDIATE METAL CONDUIT
IG	ISOLATED GROUND
KV	KILOVOLT
KVA	KILOVOLT AMPERES
KW	KILOWATT
LED	LIGHT EMITTING DIODE
LNC	LIQUID TIGHT FLEXIBLE NONMETALLIC CONDUIT
LFMC	LIQUIDTIGHT FLEXIBLE METAL CONDUIT
LV	LOW VOLTAGE
MOCP	MAXIMUM OVERCURRENT PROTECTION
MHz	MEGAHERTZ
mA	MILLIAMPERES
MIN	MINIMUM
MCA	MINIMUM CIRCUIT AMPS
MISC	MISCELLANEOUS
M	MOTOR
MCC	MOTOR CONTROL CENTER
MT, MTD	MOUNT, MOUNTED
MDU	MULTI-DWELLING UNIT
NEC	NATIONAL ELECTRIC CODE
NESC	NATIONAL ELECTRIC SAFETY CODE
NEMA	NATIONAL ELECTRICAL MANUFACTURERS ASSOCIATION
N	NEUTRAL
(N)	NEW
NC	NORMALLY CLOSED
NO	NORMALLY OPEN
N/A	NOT APPLICABLE
N.I.C.	NOT IN CONTRACT
NTS	NOT TO SCALE
OC	ON CENTER
OSP	OUTSIDE PLANT
OFCI	OWNER FURNISHED, CONTRACTOR INSTALLED
OFOI	OWNER FURNISHED, OWNER INSTALLED
PNL	PANEL
PH	PHASE
PVC	POLY-VINYL-CHLORIDE
PWR	POWER
QTY	QUANTITY
REF	REFERENCE
(R)	RELOCATE
RFI	REQUEST FOR INFORMATION
REQD	REQUIRED
RMC	RIGID METAL CONDUIT
RM	ROOM
SHT	SHEET
SIM	SIMILAR
SPKR	SPEAKER
STD	STANDARD
SPD	SURGE PROTECTION DEVICE
SWBD	SWITCHBOARD
TBB	TELECOMMUNICATIONS BONDING BACKBONE
TGB	TELECOMMUNICATIONS GROUNDING BUS BAR
TTB	TELEPHONE TERMINAL BOARD
TBD	TO BE DETERMINED
XFMR	TRANSFORMER
TVSS	TRANSIENT VOLTAGE SURGE SUPPRESSOR
TP	TRANSITION POINT
TYP	TYPICAL
UG	UNDERGROUND
UL	UNDERWRITERS LABORATORIES
UPS	UNINTERRUPTIBLE POWER SUPPLY
UON	UNLESS OTHERWISE NOTED
VFD	VARIABLE FREQUENCY DRIVE
VRFY	VERIFY
V	VOLTS, VOLTAGE
WP	WEATHERPROOF
WG	WIRE GUARD
W	WIRE, WHITE
W/	WITH
W/O	WITHOUT
WAO	WORK AREA OUTLET

Connections / Equipment

- VFD — COMBINATION ADJUSTABLE FREQUENCY DRIVE WITH SAFETY DISCONNECT SWITCH
- COMBINATION MOTOR STARTER/FUSED DISCONNECT SWITCH
- CONTACTOR COIL
- HEAVY DUTY FUSED DISCONNECT SWITCH
- MOTOR CONNECTION
- NON-FUSED DISCONNECT SWITCH
- RELAY
- DR — REMOTE DRIVER FOR LED LUMINAIRES
- T — TRANSFORMER
- FSD — FIRE SMOKE DAMPER
- SD — SMOKE DAMPER
- J — CEILING MOUNTED JUNCTION BOX
- J — FLOOR MOUNTED JUNCTION BOX
- WALL-MOUNTED JUNCTION BOX
- SH — MAGNETIC DOOR HOLDER

Fire Alarm

- FACP — FIRE ALARM CONTROL PANEL
- NAC — NOTIFICATION APPLIANCE CIRCUIT PANEL
- FAA — FIRE ALARM ANNUNCIATOR PANEL

General

- X / X — DETAIL NUMBER AND SHEET LOCATION
- XX-X / LOCATION — EQUIPMENT IDENTIFICATION
- XX — FOOD SERVICE EQUIPMENT / CALCULATION TAG
- 1 — KEYED NOTE
- POINT OF CONNECTION
- A / XXX — SECTION NUMBER AND SHEET LOCATION
- —X—X— DEMOLISH
- EXISTING WORK
- NEW WORK

Lighting

- COMBINATION EXIT SIGN CEILING MOUNTED AND DUAL HEAD EMERGENCY EGRESS LIGHTING WITH BATTERY PACK. ARROW(S) INDICATES DIRECTION IF SHOWN
- COMBINATION EXIT SIGN WALL MOUNTED AND DUAL HEAD EMERGENCY EGRESS LIGHTING WITH BATTERY PACK. ARROW(S) INDICATES DIRECTION IF SHOWN
- EMERGENCY LUMINAIRE WITH BATTERY PACK
- EXIT SIGN CEILING MOUNTED, ARROW(S) INDICATES DIRECTION IF SHOWN
- EXIT SIGN WALL MOUNTED, ARROW(S) INDICATES DIRECTION IF SHOWN
- RECESSED LUMINAIRE
- SURFACE OR PENDANT MOUNTED STRIPLIGHT
- WALL MOUNTED LUMINAIRE

Miscellaneous

- #10 / B-27,29,31. — BRANCH CIRCUIT WIRING. ARROW INDICATES HOME RUN TO PANEL WITH CIRCUITS AS NOTED. WIRE SIZE IS #12 AWG MINIMUM UNLESS NOTED OTHERWISE. SHORT TICK MARKS INDICATE PHASE CONDUCTORS. LONG TICK MARKS INDICATE NEUTRAL CONDUCTORS. A SINGLE CURVED TICK MARK INDICATES INSULATED GREEN GROUND CONDUCTOR. SECOND CURVED TICK MARK INDICATES "ISOLATED GROUND" (GREEN INSULATION WITH YELLOW STRIPE) CONDUCTOR.
- BRANCH PANEL
- CIRCUIT BREAKER
- DRY TYPE TRANSFORMER
- FLUSH MOUNT EQUIPMENT ENCLOSURE AS NOTED
- FLUSH WALL MOUNTED BRANCH PANEL
- GB — GROUND BAR
- GROUNDING POINT
- MAIN DISTRIBUTION PANEL / SUB DISTRIBUTION PANEL
- PP — POWER UTILITY POLE
- CV — SUBGRADE VAULT CATV
- PV — SUBGRADE VAULT POWER
- TV — SUBGRADE VAULT TELEPHONE
- SURFACE MOUNT EQUIPMENT ENCLOSURE AS NOTED
- TP — TELEPHONE UTILITY POLE
- UTILITY TRANSFORMER PAD/VAULT

Raceways

- EXISTING CONDUIT CONCEALED IN WALL OR CEILING SPACE
- EXISTING CONDUIT ROUTED BELOW FLOOR / GRADE
- —OP— OVERHEAD PRIMARY SERVICE
- —OT— OVERHEAD TELEPHONE SERVICE
- UNDERGROUND CABLE TELEVISION SERVICE
- UNDERGROUND PRIMARY SERVICE
- UNDERGROUND SECONDARY SERVICE
- UNDERGROUND TELEPHONE SERVICE
- CONDUIT CONCEALED IN WALL OR CEILING SPACE
- CONDUIT ROUTED BELOW FLOOR / GRADE
- CONDUIT ELLED DOWN
- CONDUIT ELLED UP
- CONDUIT/WIRING CONTINUATION
- CONDUIT/WIRING STUBBED OUT WITH END CAP OR INSULATED PLASTIC BUSHING
- FLEXIBLE CONDUIT

Switches and Receptacles

- DUPLEX RECEPTACLE (MULTIPLE LETTERS INDICATE MULTIPLE OPTIONS)
  A = ABOVE COUNTER
  B = RECESSED RECEPTACLE
  F = ARC FAULT PROTECTED BY BREAKER IN PANEL
  G = GROUND FAULT CIRCUIT INTERRUPTER
  L = ISOLATED GROUND
  S = SPLIT WIRED
  T = TAMPER RESISTANT SHUTTERED RECEPTACLE
  U = USB PORT(S)
  W = WEATHERPROOF CONTINUOUS USE COVER, GFCI PROTECTED, WITH WEATHER-RESISTANT RECEPTACLE
- DOUBLE DUPLEX RECEPTACLE. SEE LETTER CODE LIST AT DUPLEX RECEPTACLE FOR OPTIONS
- EQUIPMENT ELECTRICAL CONNECTION
- SPECIAL PURPOSE RECEPTACLE. LETTER CODE DENOTES RECEPTACLE CONFIGURATION
  LX-XXR = NEMA CONFIGURATION TWIST-LOCK RECEPTACLE
  X-XXR = NEMA CONFIGURATION STRAIGHT BLADE RECEPTACLE
  P = PENDANT MOUNT WITH CORD GRIPS. VERIFY PENDANT LENGTH
  X = COORDINATE RECEPTACLE CONFIGURATION WITH EQUIPMENT BEING SUPPLIED
- OS — CEILING MOUNTED OCCUPANCY SENSOR
  P = PASSIVE INFRARED
  D = DUAL TECHNOLOGY
  U = ULTRASONIC, 360 DEG RANGE
  H = ULTRASONIC, HALLWAY PATTERN
  v (LOWERCASE) = VACANCY CONTROL DESIGNATION
- OS — WALL MOUNTED OCCUPANCY SENSOR
  P = PASSIVE INFRARED
  D = DUAL TECHNOLOGY
  v (LOWERCASE) = VACANCY CONTROL DESIGNATION
- WALL MOUNTED OCCUPANCY SENSOR/SWITCH
  S = PASSIVE INFRARED WITH INTEGRAL "OFF" SWITCH
  T = DUAL RELAY PASSIVE INFRARED WITH TWO INTEGRAL "OFF" SWITCHES
  D = PASSIVE INFRARED WITH INTEGRAL DIMMER TO OFF.
  v (LOWERCASE) = VACANCY CONTROL DESIGNATION
- PHOTO ELECTRIC SWITCH
  D = CONTINUOUS DIMMING PHOTOCELL
  S = SWITCHED PHOTOCELL
- $ — SINGLE POLE SWITCH
  2 = DOUBLE POLE SWITCH
  3 = THREE-WAY SWITCH
  4 = FOUR-WAY SWITCH
  a THRU z (LOWERCASE) = LUMINAIRE CONTROL DESIGNATION
  D = DIMMER
  F = FAN SPEED CONTROL
  K = KEY OPERATED SWITCH
  L = LIGHTED HANDLE
  M = MANUAL MOTOR STARTER WITH THERMAL OVERLOAD
  P = SWITCH WITH PILOT LIGHT
  S = SENTRY SWITCH
  T = INTERVAL TIMER
  W = WEATHERPROOF SWITCH
  V = LOW VOLTAGE SWITCH

GENERAL ELECTRICAL NOTES

A. NEW MEXICO: 2017 NEC

B. CONSULT ALL DRAWINGS IN THIS PROJECT AND BECOME FAMILIAR WITH ALL EQUIPMENT TO BE INSTALLED. COORDINATE ALL ASPECTS OF THE CONSTRUCTION WITH THE OTHER TRADES ON THE JOB TO ENSURE THAT ALL WORK AND MATERIALS REQUIRED PROVIDE A COMPLETE AND OPERATIONAL RESIDENTIAL BUILDING ARE INCLUDED IN THE BID.

C. PROVIDE CONNECTION TO ALL 120V FIRE ALARM PANELS / POWER SUPPLIES. COORDINATE WITH DIVISION 28 DESIGN BUILD CONTRACTOR.

D. COORDINATE WITH GENERAL CONTRACTOR DURING BID FOR DIVISION 23 LINE VOLTAGE POWER CONNECTIONS TO CONTROLS / POWER SUPPLIES (IF ANY) NOT ALREADY CONTAINED WITHIN THE DOCUMENTS TO BE INCLUDED IN DIVISION 26 SCOPE OF WORK.

E. PROVIDE POWER TO LUMINAIRES / CONTROL DEVICES AS REQUIRED TO MEET NFPA LIFE-SAFETY EGRESS ILLUMINATION REQUIREMENTS.

F. PROVIDE PRICING FOR CONNECTIONS / DISCONNECTS TO FIRE SPRINKLER AIR COMPRESSORS, JOCKEY PUMPS, AND BELLS. COORDINATE WITH DIVISION 21.

G. BRANCH CIRCUIT WIRING ASSUMES SIX DUPLEX RECEPTACLES PER 20-AMP CIRCUIT.

H. PROVIDE DEDICATED NEUTRALS FOR EACH CIRCUIT.

I. MINIMUM SIZE CONDUIT SHALL BE 3/4-INCH TRADE SIZE.

J. FEEDER CIRCUIT WIRING: ALUMINUM THWN-2
BRANCH CIRCUIT WIRING FOR BUILDING COMMON AREAS: COPPER THHN/THWN-2, #12 CU MINIMUM. BUILDING TYPE IIA: NMB CABLE ALLOWED. MC CABLE ALLOWED FOR 20-AMP AND 30-AMP CIRCUITS IN ACCESSIBLE DROP CEILING LOCATIONS. NOT ALLOWED FOR HOMERUNS TO PANELBOARD.

K. BRANCH CIRCUIT WIRING IN DWELLING UNITS: COPPER THHN. NMB CABLE ALLOWED.

L. PROVIDE SELF-TESTING GFCI AND AFCI OUTLETS OR GFCI CIRCUIT BREAKERS WHERE REQUIRED BY CODE.

LUMINAIRE SCHEDULE

TYPE	DESCRIPTION	HOUSING	SHIELDING	MOUNTING	FINISH	UL/IP RATING	DRIVER/ POWER SUPPLY	LIGHT SOURCE	INPUT WATTS	MFG/CATALOG #	NOTES
'A'	SURFACE MOUNT LED STRIPLIGHT; NOMINAL 4-INCH WIDE X 4-INCH HIGH X 24-INCH LONG	COLD ROLLED STEEL	ROUND FROSTED ACRYLIC LENS	CEILING MOUNTED	WHITE	UL DAMP	INTEGRAL DRIVER	4000 NOMINAL LUMENS; 3500K LED; 80 CRI	30	LITHONIA CLX SERIES, OR APPROVED	PROVIDE WITH INTEGRAL OCCUPANCY SENSOR
'A-E'	SAME AS TYPE 'A' EXCEPT WITH INTEGRAL EMERGENCY BATTERY BACK-UP FOR MINIMUM 1100 LUMEN OUTPUT										
'B1'	DECORATIVE LED WALL SCONCE, 12-INCH WIDE X 12-INCH HIGH X 4-INCH DEEP	18 GAUGE STEEL	LUMINOUS WHITE ACRYLIC	WALL; 7'-6" TO CENTER	SILVER		INTEGRAL DRIVER	1200 NOMINAL LUMENS; 3000K LED	22	TERON LIGHTING ECLIPSE S RNG LED SERIES, OR APPROVED	
'B2'	VANITY LED WALL SCONCE, 24-INCH WIDE X 6-INCH HIGH X 4-INCH DEEP	18 GAUGE STEEL	LUMINOUS WHITE ACRYLIC	WALL; 6'-8" TO CENTER	SILVER	UL DAMP	INTEGRAL DRIVER	3500 NOMINAL LUMENS; 3000K LED	33	TERON LIGHTING CAPRI LED 24" SERIES, OR APPROVED	
'B3'	VANITY LED WALL SCONCE, 36-INCH WIDE X 6-INCH HIGH X 4-INCH DEEP	18 GAUGE STEEL	LUMINOUS WHITE ACRYLIC	WALL; 6'-8" TO CENTER	SILVER	UL DAMP	INTEGRAL DRIVER	5000 NOMINAL LUMENS; 3000K LED	35	TERON LIGHTING CAPRI LED 24" SERIES, OR APPROVED	
'C1'	DECORATIVE LED WALL SCONCE WITH REMOTE BATTERY BACK-UP, 12-INCH WIDE X 12-INCH HIGH X 4-INCH DEEP	18 GAUGE STEEL	LUMINOUS WHITE ACRYLIC	WALL; 7'-6" TO CENTER	SILVER		INTEGRAL DRIVER	2400 NOMINAL LUMENS; 3000K LED	25	TERON LIGHTING ECLIPSE S RNG LED SERIES, OR APPROVED	
'C2'	DECORATIVE LED WALL SCONCE, 7-INCH WIDE X 7-INCH HIGH X 4-INCH DEEP	18 GAUGE STEEL	LUMINOUS WHITE ACRYLIC	WALL; 7'-6" TO CENTER	SILVER		INTEGRAL DRIVER	1600 NOMINAL LUMENS; 3000K LED	10.5	TERON LIGHTING TIGER M LED SERIES, OR APPROVED	
'D1'	RECESSED ROUND LED DOWNLIGHT, 8-INCH DIAMETER	EXTRUDED ALUMINUM	SOFT FOCUS LENS	RECESSED	WHITE	UL DAMP	INTEGRAL DRIVER; 0-10V DIMMING TO 1%	3000 NOMINAL LUMENS; 3500K LED; 80CRI	30	GOTHAM EVO SERIES, OR APPROVED	
'D1-E'	SAME AS TYPE 'D1' EXCEPT WITH INTEGRAL EMERGENCY BATTERY BACK-UP FOR MINIMUM 800 LUMEN OUTPUT										
'D2'	RECESSED ROUND LED DOWNLIGHT, 8-INCH DIAMETER	EXTRUDED ALUMINUM	SOFT FOCUS LENS	RECESSED	WHITE	UL DAMP	INTEGRAL DRIVER; 0-10V DIMMING TO 1%	2000 NOMINAL LUMENS; 3500K LED; 80CRI	20	GOTHAM EVO SERIES, OR APPROVED	
'D2-E'	SAME AS TYPE 'D2' EXCEPT WITH INTEGRAL EMERGENCY BATTERY BACK-UP FOR MINIMUM 800 LUMEN OUTPUT										
'X'	UNIVERSAL THIN PROFILE LED EXIT SIGN WITH INTEGRAL EMERGENCY BATTERY BACKUP; NOMINAL 12-INCH WIDE X 8.5-INCH TALL X 0.5-INCH DEEP; CHEVRONS AS INDICATED ON DRAWINGS; SINGLE OR DUAL FACED AS INDICATED ON DRAWINGS	DICE CAST ALUMINUM	NA	REFER TO ARCHITECTURAL DRAWINGS FOR MOUNTING CONDITIONS	BRUSHED ALUMINUM	UL DAMP	INTEGRAL DRIVER	GREEN LETTERING; LED	2	EVENLITE RAZOR MK3, ISOLITE, OR APPROVED	CONTRACTOR TO VERIFY BACK-BOX REQUIREMENTS PRIOR TO ROUGH-IN

NOTES:

1. THIS LUMINAIRE SCHEDULE IS NOT COMPLETE WITHOUT A COPY OF THE PROJECT MANUAL CONTAINING THE ELECTRICAL SPECIFICATIONS.
2. DIMMING CONTROL PROTOCOL (0-10VDC, LINE VOLTAGE, DALI, ETC.) COMPATIBLE WITH LIGHTING CONTROL SYSTEM AS SPECIFIED AND SHOWN ON DRAWINGS.
3. COORDINATE ALL CEILING TYPES WITH LUMINAIRE LOCATIONS PRIOR TO ORDERING LUMINAIRES. COORDINATE INSTALLATION WITH REFLECTED CEILING PLAN.
4. SPECIFIED MANUFACTURERS ARE APPROVED TO SUBMIT BID. INCLUSION DOES NOT RELIEVE MANUFACTURER FROM SUPPLYING PRODUCT AS DESCRIBED.
5. PROVIDE SUBMITTALS THAT INCLUDE THE LUMINAIRE, LAMP AND DIMMABLE LED DRIVER INFORMATION OF EACH LUMINAIRE, WITH APPLICABLE OPTIONS CLEARLY CHECKED OR HIGHLIGHTED. SUBMITTALS NOT INCLUDING THIS INFORMATION WILL BE RETURNED AS REJECTED BY THE ENGINEER OF RECORD.
6. REMOTE DRIVERS: UL LISTED FOR THEIR APPLICATION. DRIVERS MARKED AS UL RECOGNIZED COMPONENT BUT NOT UL LISTED ARE SUBJECT TO REMOVAL AND REPLACEMENT AT NO COST TO OWNER.

ELECTRICAL APPROVED - JUSTIN MORENO
Exceptions As Noted
Checking is only for general conformance with the design concept of the project and general compliance with the information given in the contract documents. Any corrections or comments are subject to the requirements of the plans and specifications. Contractor is responsible for dimensions which shall confirmed and correlated at the job site, fabrication processes and techniques of construction, coordination of his/her work with that of all the trades and the satisfactory performance of his/her work and all code requirements. All sections shall conform with the National Electrical Code and the State of New Mexico Electrical Code.
05/31/2023 10:15:55 AM

REVIEWED and APPROVED with no exceptions

Review and approval of the Submitted plans by this office does not relieve the applicant of the responsibility of compliance with all applicable codes and standards.

Fire Marshal 9-20-23
505-726-5443 Date:

PLANS APPROVED
BY CITY OF GALLUP, N.M.
BUILDING DEPARTMENT
☒ APPROVED
☐ APPROVED AS NOTED
By: John Mayo
Permit 23-054 Date: 9-19-2023
Does Not Include Mechanical, Electrical or Plumbing

RECEIVED
AUG 28 2023
CITY OF GALLUP
PLANNING & DEVELOPMENT
BY: TIME: 3:26PM

SHEET INDEX

INTERFACE ENGINEERING
PROJECT 2022-1135
CONTACT KRISTINE LEAVENS
300 SW Main Street, Suite 1600
Portland, OR 97204
TEL 503.382.2266
www.interfaceengineering.com

ACTIVE
PROFESSIONAL ENGINEER
STATE OF NEW MEXICO
JAMES R. SATTERFIELD
NEW MEXICO 27943 PROFESSIONAL ENGINEER
Digitally signed by Jim Satterfield
Reason: I have reviewed this document
Date: 2023.08.10 08:33:17-07'00'

HAVEN LIVING
3009 W HISTORIC HWY 66
GALLUP, NM 87301

SHEET TITLE
SYMBOL LIST AND GENERAL NOTES - ELECTRICAL

REVISIONS

DRAWN BY KCL
CHECKED BY MKO
JOB NO. 2022-1372
DATE 03/31/2023
SHEET NUMBER
E0.1

GENERAL SHEET NOTES

A. PROVIDE CIRCUIT AND RECEPTACLE IN FIRE SPRINKLER VAULT FOR SUMP PUMP AND 1-INCH CONDUIT FOR FIRE ALARM. COORDINATE WITH OWNER PROJECT MANAGER.

B. PROVIDE NEW CONNECTION TO FC-01'S AND PTHP'S FROM ASSOCIATED UNIT LOAD CENTERS. REFER TO MECHANICAL DRAWINGS FOR FINAL EQUIPMENT LOCATIONS.

SHEET KEYNOTES

1. UTILIZE EXISTING POOL PANEL 'PL' TO SERVE NEW POOL EQUIPMENT. POOL EQUIPMENT DESIGN AND CONNECTIONS BY POOL EQUIPMENT VENDOR.
2. SERVE WASHERS / DRYERS FROM NEW PANEL 'LAUNDRY'.
3. EXTEND CIRCUIT FROM NEAREST RECEPTACLE TO SERVE NEW RECEPTACLE.
4. FEEDER TO UNIT LOAD CENTER UPSIZED FOR VOLTAGE DROP.

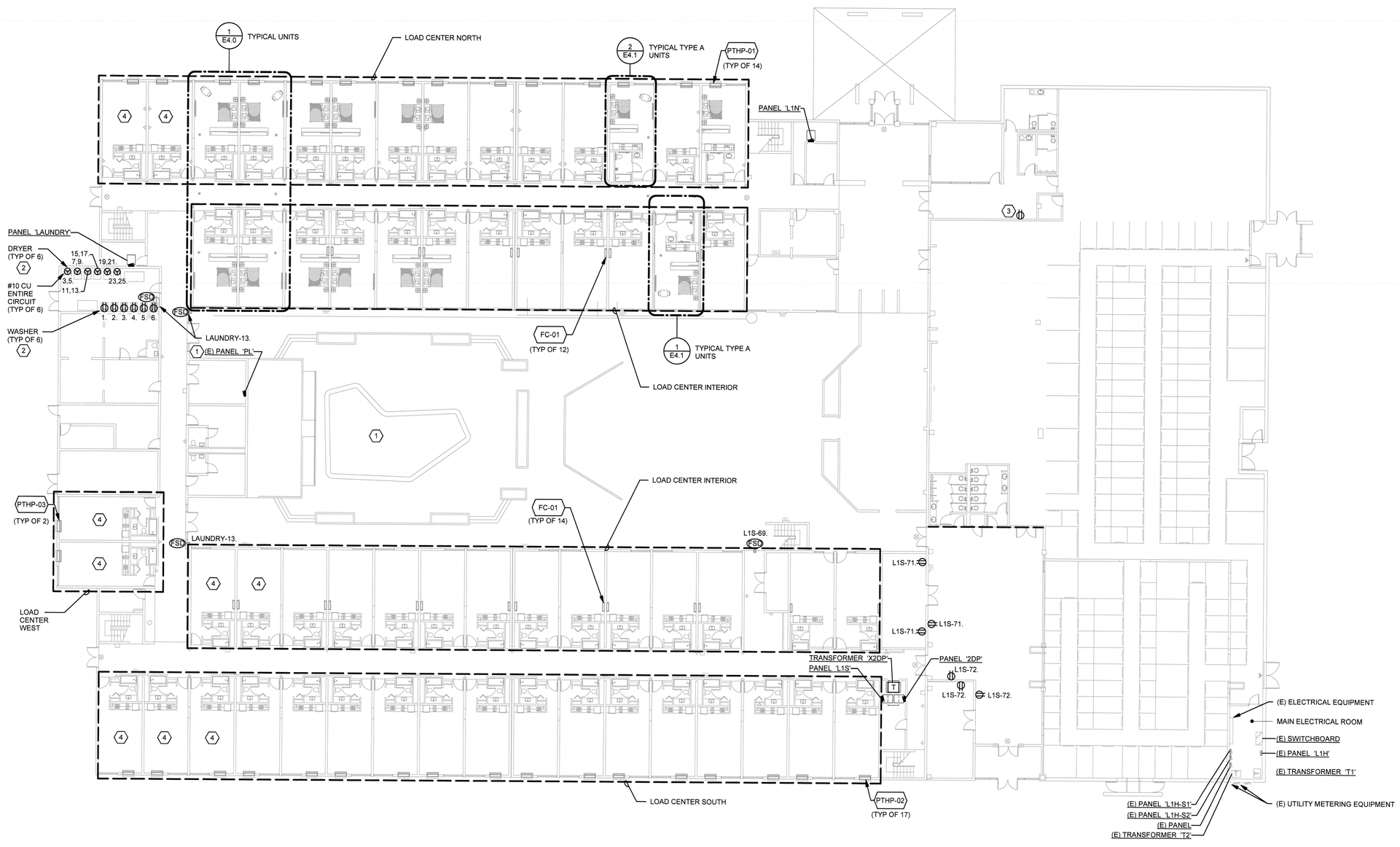

1 FIRST FLOOR PLAN - POWER

0' 8' 16' 32'
1/16" = 1'-0"

RECEIVED
AUG 28 2023
CITY OF GALLUP
PLANNING & DEVELOPMENT
BY: TIME:

NOTE
ELECTRICAL CONTRACTOR MUST COMPLY WITH ALL 2017 NATIONAL ELECTRICAL / NEW MEXICO ELECTRICAL / NEW MEXICO ADMINISTRATIVE CODES & ELECTRICAL SYSTEMS AND EQUIPMENT SHALL COMPLY WITH THE 2018 COMMERICAL ENERGY CONSERVATION CODES FOR NEW MEXICO NMAC 14.7.9

INTERFACE ENGINEERING
PROJECT 2022-1135
CONTACT KRISTINE LEAVENS
100 SW Main Street, Suite 1600
Portland, OR 97204
TEL 503.382.2266
www.interfaceengineering.com

ACTIVE
PROFESSIONAL ENGINEER
STATE OF NEW MEXICO
JAMES R. SAUNDERS
NEW MEXICO
27483
PROFESSIONAL ENGINEER
Digitally signed by James Sathern Saunders. There is no date and this document
Date: 2023.05.12 08:33:17-07'00'

HAVEN LIVING
3009 W. HISTORIC HWY 66
GALLUP, NM 87301

SHEET TITLE
FIRST FLOOR PLAN - POWER

REVISIONS

DRAWN BY KCL
CHECKED BY MKO
JOB NO. 2022-1372
DATE 03/31/2023
SHEET NUMBER
E1.0

GENERAL SHEET NOTES

A. PROVIDE NEW CONNECTION TO RTU'S FROM MAIN ELECTRICAL SERVICE. REFER TO MECHANICAL DRAWINGS FOR FINAL EQUIPMENT LOCATIONS.

B. PROVIDE NEW CONNECTION TO FC-01'S AND PTHP'S FROM ASSOCIATED UNIT LOAD CENTERS. REFER TO MECHANICAL DRAWINGS FOR FINAL EQUIPMENT LOCATIONS.

SHEET KEYNOTES

1. NOT USED.
2. FEEDER TO UNIT LOAD CENTER UPSIZED FOR VOLTAGE DROP.

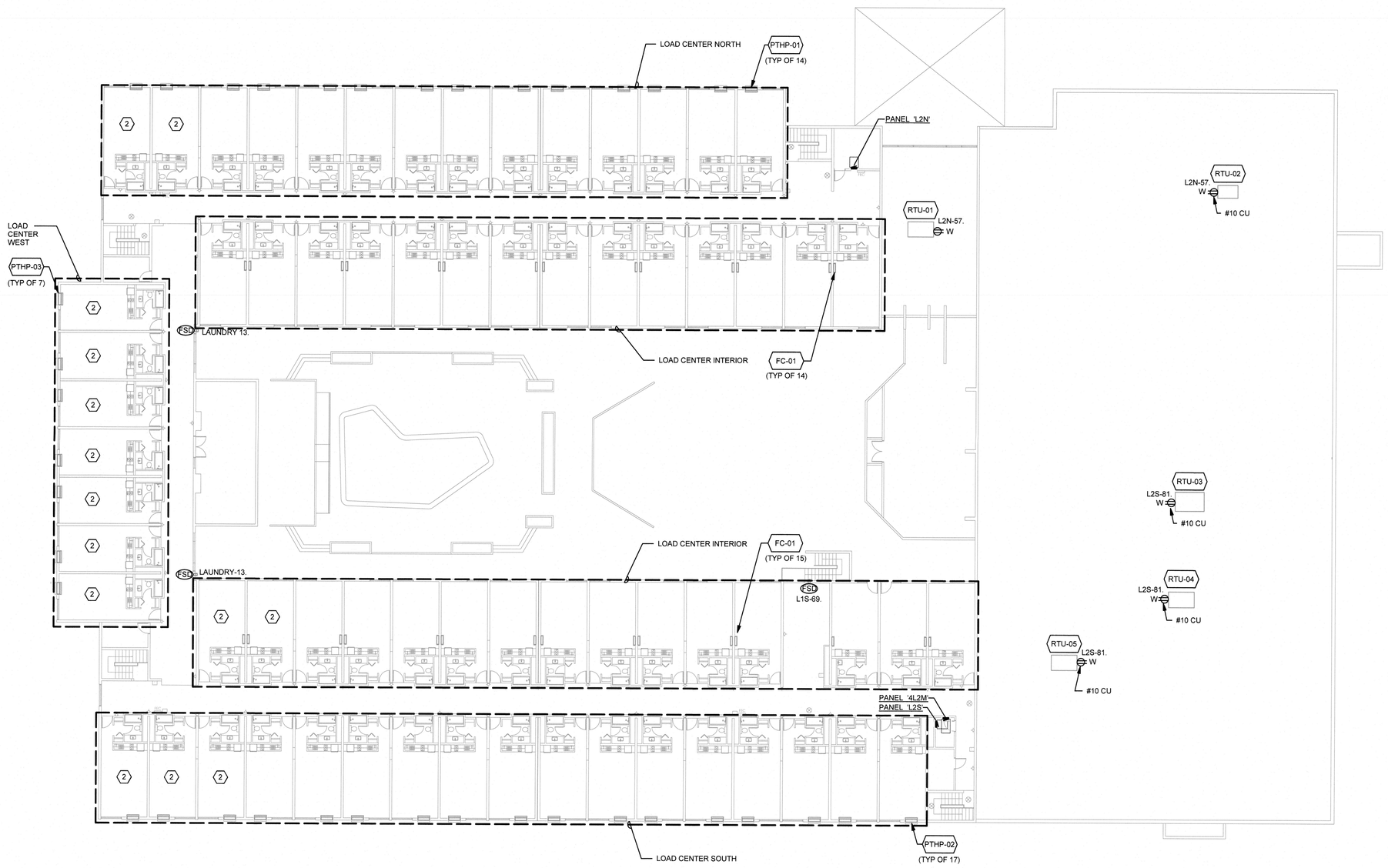

1 SECOND FLOOR PLAN - POWER

0' 8' 16' 32'
1/16" = 1'-0"

RECEIVED
AUG 28 2023
CITY OF GALLUP
PLANNING & DEVELOPMENT
BY: ____ TIME: 3:26PM

NOTE
ELECTRICAL CONTRACTOR MUST COMPLY WITH ALL 2017 NATIONAL ELECTRICAL / NEW MEXICO ELECTRICAL / NEW MEXICO ADMINISTRATIVE CODES
&
ELECTRICAL SYSTEMS AND EQUIPMENT SHALL COMPLY WITH THE 2018 COMMERICAL ENERGY CONSERVATION CODES FOR NEW MEXICO NMAC 14.7.9

INTERFACE ENGINEERING
PROJECT 2022-1135
CONTACT KRISTINE LEAVENS
100 SW Main Street, Suite 1600
Portland, OR 97204
TEL 503.382.2266
www.interfaceengineering.com

ACTIVE
PROFESSIONAL ENGINEER
STATE OF NEW MEXICO
JAMES R. SATTERFIELD
NEW MEXICO
27443
PROFESSIONAL ENGINEER
Digitally signed by Jim Satterfield
Reason: I am reviewed this document
Date: 2023.08.12
08:53:17-07'00'

HAVEN LIVING
3009 W HISTORIC HWY 66
GALLUP, NM 87301

SHEET TITLE
SECOND FLOOR PLAN - POWER

REVISIONS

DRAWN BY KCL
CHECKED BY MKO
JOB NO. 2022-1372
DATE 03/31/2023
SHEET NUMBER
E1.1

GENERAL SHEET NOTES

A. PROVIDE NEW CONNECTION TO DOAS UNITS FROM MAIN ELECTRICAL SERVICE. REFER TO MECHANICAL DRAWINGS FOR FINAL EQUIPMENT LOCATIONS.

B. PROVIDE NEW CONNECTION TO CONDENSING UNITS CU-01 FROM ASSOCIATED UNIT LOAD CENTERS. REFER TO MECHANICAL DRAWINGS FOR FINAL EQUIPMENT LOCATIONS.

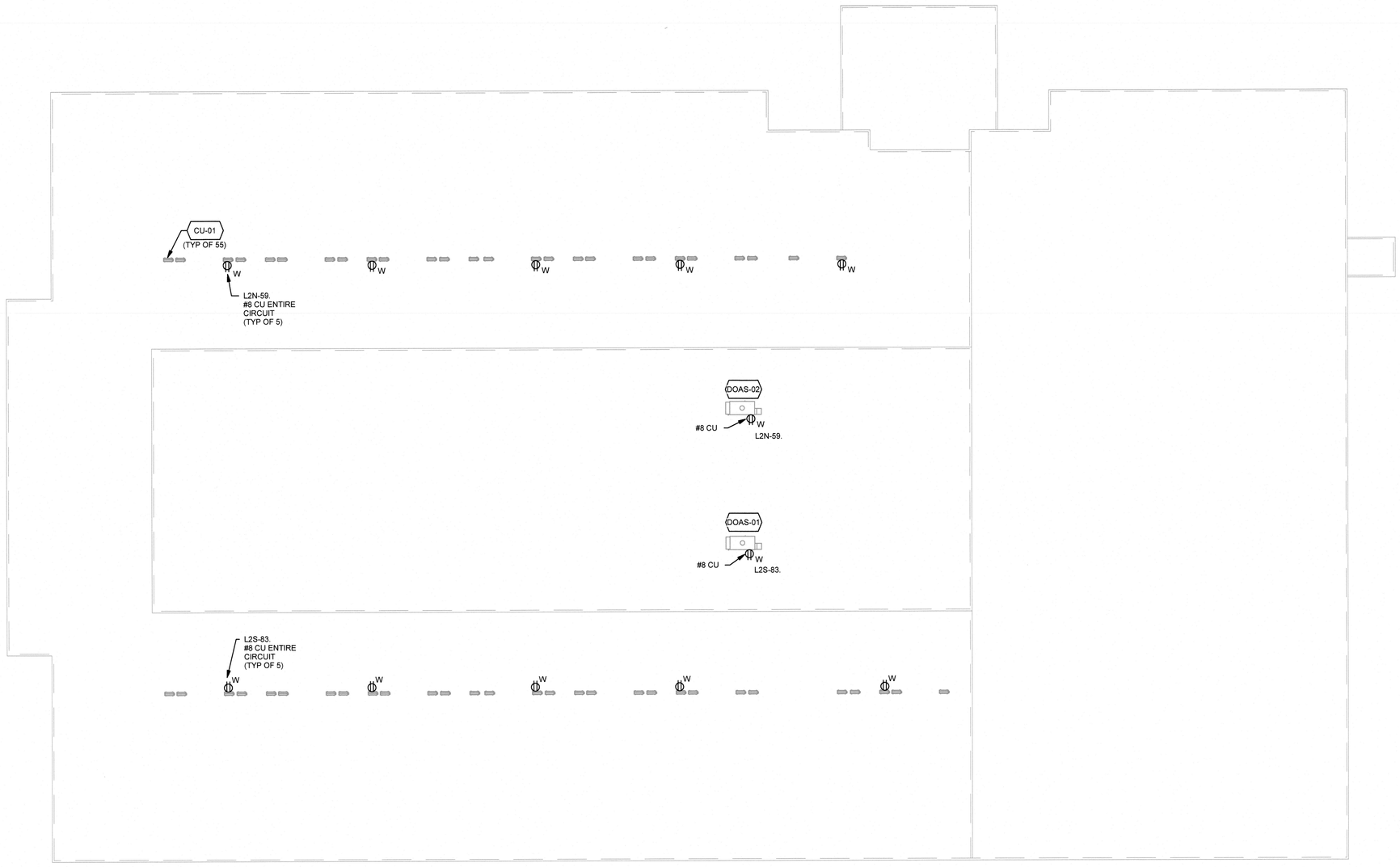

NOTE
ELECTRICAL CONTRACTOR MUST COMPLY WITH ALL 2017 NATIONAL ELECTRICAL / NEW MEXICO ELECTRICAL / NEW MEXICO ADMINISTRATIVE CODES
&
ELECTRICAL SYSTEMS AND EQUIPMENT SHALL COMPLY WITH THE 2018 COMMERICAL ENERGY CONSERVATION CODES FOR NEW MEXICO NMAC 14.7.9

1 ROOF PLAN - POWER

0' 8' 16' 32'
1/16" = 1'-0"

INTERFACE ENGINEERING

PROJECT 2022-1135
CONTACT KRISTINE LEAVENS

100 SW Main Street, Suite 1600
Portland, OR 97204
TEL 503.382.2266
www.interfaceengineering.com

ACTIVE
PROFESSIONAL ENGINEER
STATE OF NEW MEXICO
JAMES R. SATTERFIELD
NEW MEXICO
27943
PROFESSIONAL ENGINEER
Digitally signed by Jim Satterfield
Reason: I approved this document
Date: 2023.08.12 08:55:17-07'00'

RECEIVED
AUG 28 2023
CITY OF GALLUP
PLANNING & DEVELOPMENT
BY: MM TIME: 3:24pm

HAVEN LIVING
3009 W HISTORIC HWY 66
GALLUP, NM 87301

SHEET TITLE
ROOF PLAN - POWER

REVISIONS

DRAWN BY KCL
CHECKED BY MKO
JOB NO. 2022-1372
DATE 03/31/2023
SHEET NUMBER
E1.2

GENERAL SHEET NOTES

A. UTILIZE EXISTING CIRCUITS FROM DEMOLISHED LIGHTING TO SERVE NEW LIGHTS.

B. UTILIZE EXISTING LIGHTING CONTROLS IN CORRIDORS SERVING RESIDENTIAL UNITS.

C. FOR ALL TYPE 'C1' FIXTURE, PROVIDE REMOTE EMERGENCY BATTERIES TO MEET MINIMUM 1FC AT ALL EGRESS PATHS. LOCATE EMERGENCY BATTERIES IN ACCESSIBLE CEILING SPACE ABOVE FIXTURE.

SHEET KEYNOTES

1. PROVIDE NEW LIGHTING IN AREA PER ARCHITECTURAL DIRECTION. UTILIZE EXISTING CIRCUITS FROM DEMOLISHED LIGHTING TO SERVE NEW LIGHTS. UTILIZE EXISTING CONTROLS TO SERVE AREA.

2. PROVIDE NEW LIGHTING IN AREA PER ARCHITECTURAL DIRECTION. UTILIZE EXISTING CIRCUITS FROM DEMOLISHED LIGHTING TO SERVE NEW LIGHTS. REVISE LIGHTING CONTROLS TO CONTROL BOTH AREAS DUE TO REMOVAL OF WALL.

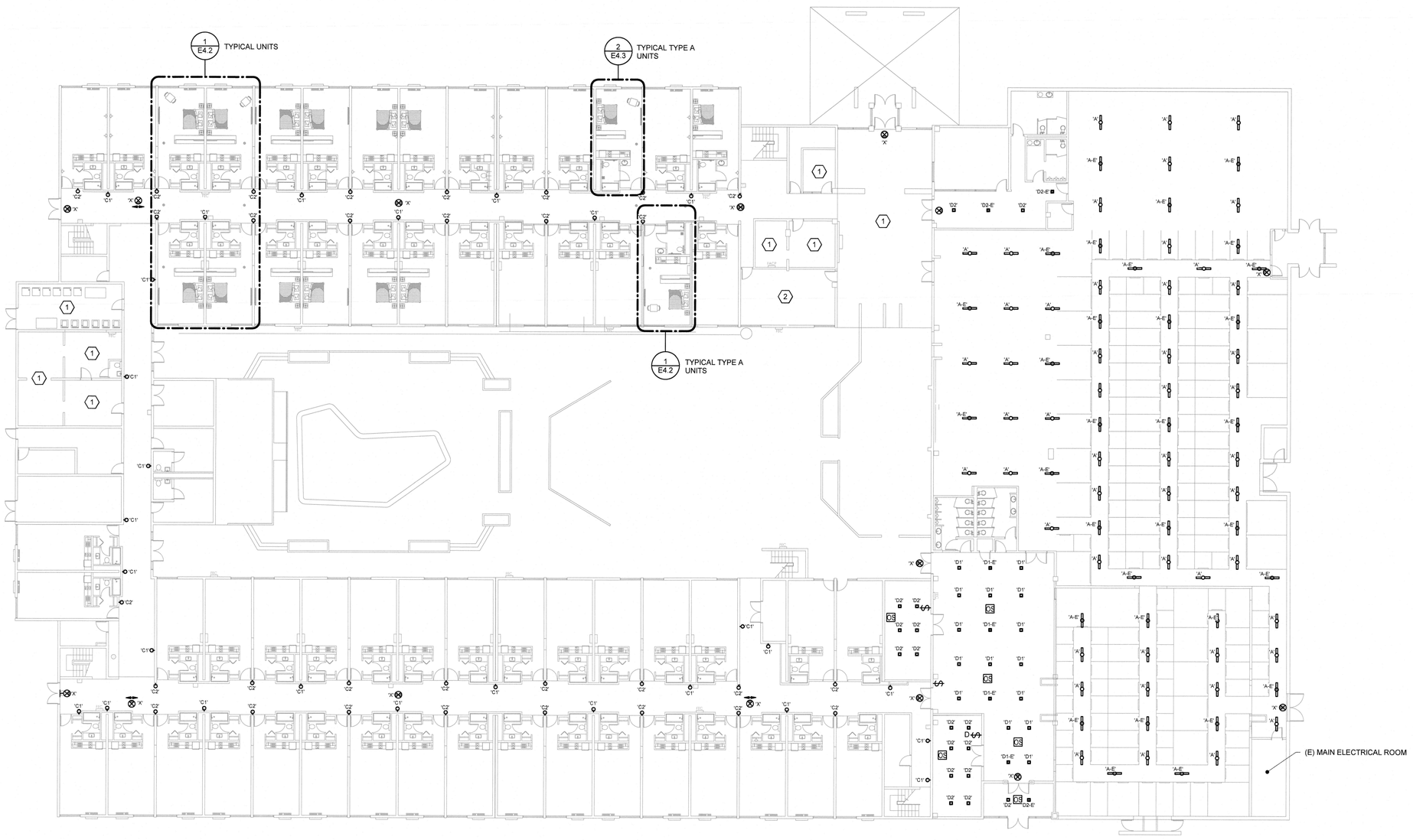

1 FIRST FLOOR REFLECTED CEILING PLAN - LIGHTING

NORTH

0' 8' 16' 32'

1/16" = 1'-0"

NOTE
ELECTRICAL CONTRACTOR MUST COMPLY WITH ALL 2017 NATIONAL ELECTRICAL / NEW MEXICO ELECTRICAL / NEW MEXICO ADMINISTRATIVE CODES & ELECTRICAL SYSTEMS AND EQUIPMENT SHALL COMPLY WITH THE 2018 COMMERICAL ENERGY CONSERVATION CODES FOR NEW MEXICO NMAC 14.7.9

REVIEWED and APPROVED with no exceptions

Review and approval of the Submitted plans by this office does not relieve the applicant of the responsibility of compliance with all applicable codes and standards.

Fire Marshal 9-20-23
505-726-5448 Date:

INTERFACE ENGINEERING

PROJECT 2022-1135
CONTACT KRISTINE LEAVENS

100 SW Main Street, Suite 1600
Portland, OR 97204
TEL 503.382.2266
www.interfaceengineering.com

ACTIVE
PROFESSIONAL ENGINEER
STATE OF NEW MEXICO
JAMES R. SATTERFIELD
NEW MEXICO
27943
PROFESSIONAL ENGINEER
INDUSTRIES

Digitally signed by Jim Satterfield
Reason: I have reviewed this document
Date: 2023.08.10
08:30:17-07'00'

RECEIVED
AUG 28 2023
CITY OF GALLUP
PLANNING & DEVELOPMENT
BY: TIME: 2:20PM

HAVEN LIVING

3009 W HISTORIC HWY 66
GALLUP, NM 87301

SHEET TITLE
FIRST FLOOR REFLECTED CEILING PLAN - LIGHTING

REVISIONS

DRAWN BY KCL

CHECKED BY MKO

JOB NO. 2022-1372

DATE 03/31/2023

SHEET NUMBER
E2.0

GENERAL SHEET NOTES

A. UTILIZE EXISTING CIRCUITS FROM DEMOLISHED LIGHTING TO SERVE NEW LIGHTS.

B. UTILIZE EXISTING LIGHTING CONTROLS IN CORRIDORS SERVING RESIDENTIAL UNITS.

C. FOR ALL TYPE 'C1' FIXTURE, PROVIDE REMOTE EMERGENCY BATTERIES TO MEET MINIMUM 1FC AT ALL EGRESS PATHS. LOCATE EMERGENCY BATTERIES IN ACCESSIBLE CEILING SPACE ABOVE FIXTURE.

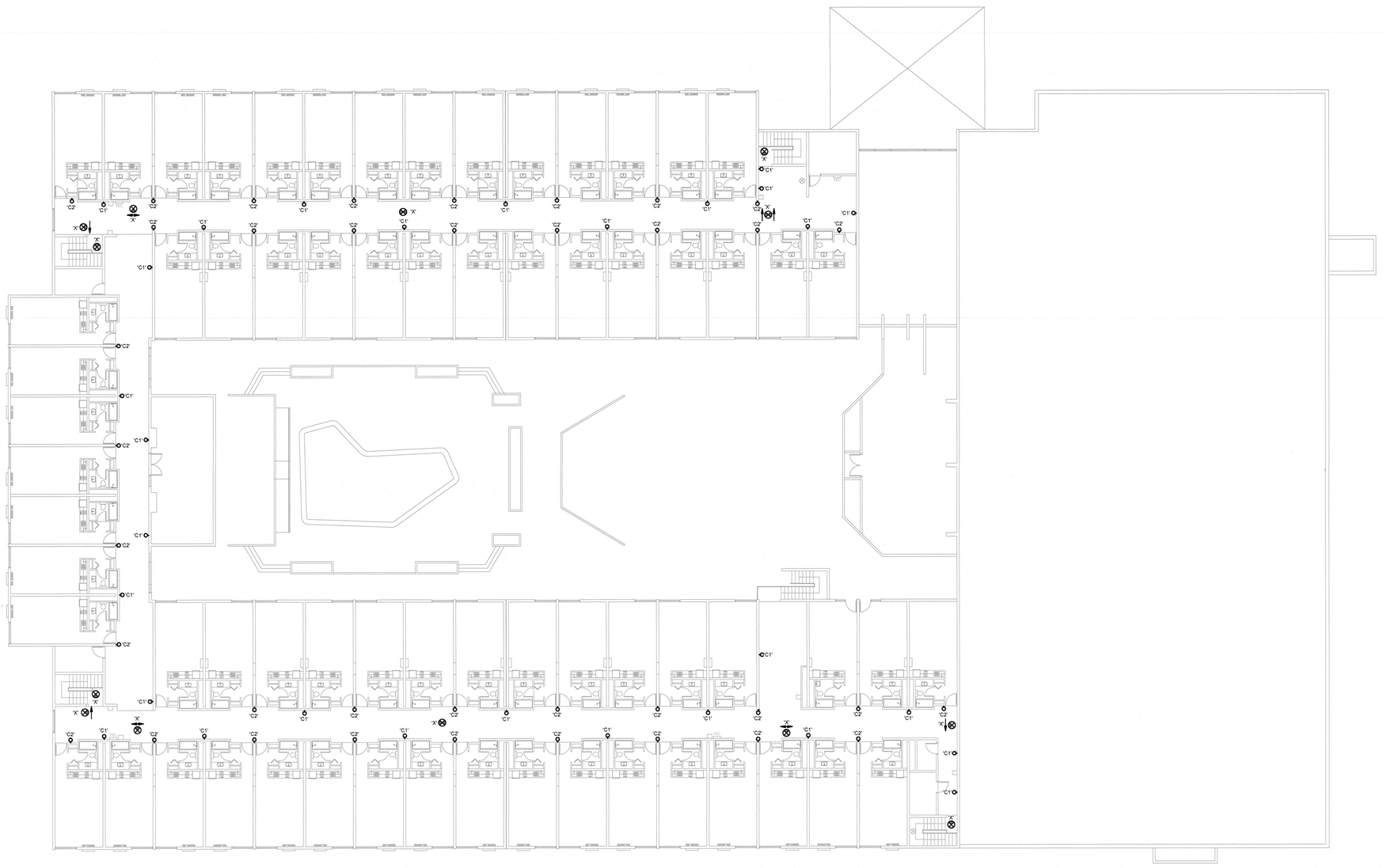

1 SECOND FLOOR RELFECTED CEILING PLAN - LIGHTING

0' 8' 16' 32'

1/16" = 1'-0"

NOTE

ELECTRICAL CONTRACTOR MUST COMPLY WITH ALL 2017 NATIONAL ELECTRICAL / NEW MEXICO ELECTRICAL / NEW MEXICO ADMINISTRATIVE CODES & ELECTRICAL SYSTEMS AND EQUIPMENT SHALL COMPLY WITH THE 2018 COMMERICAL ENERGY CONSERVATION CODES FOR NEW MEXICO NMAC 14.7.9

REVIEWED and APPROVED with no exceptions

Review and approval of the Submitted plans by this office does not relieve the applicant of the responsibility of compliance with all applicable codes and standards.

Fire Marshal 505-726-5448 Date 9-20-23

INTERFACE ENGINEERING

PROJECT 2022-1135
CONTACT KRISTINE LEAVENS

100 SW Main Street, Suite 1600
Portland, OR 97204
TEL 503.382.2266
www.interfaceengineering.com

ACTIVE
PROFESSIONAL ENGINEER
STATE OF NEW MEXICO
JAMES R. SATTLER
NEW MEXICO
27943
PROFESSIONAL ENGINEER

Digitally signed by James Sattler
Reason: I have reviewed this document
Date: 2023.08.12 08:55:17-07'00'

RECEIVED
AUG 28 2023
CITY OF GALLUP
PLANNING & DEVELOPMENT
BY: MK TIME: 8:52AM

HAVEN LIVING

3009 W HISTORIC HWY 66
GALLUP, NM 87301

SHEET TITLE
SECOND FLOOR REFLECTED CEILING PLAN - LIGHTING

REVISIONS

DRAWN BY KCL

CHECKED BY MKO

JOB NO. 2022-1372

DATE 03/31/2023

SHEET NUMBER E2.1

GENERAL SHEET NOTES

A. PROVIDE 100-AMP, 208-VOLT / 1-PHASE, 16-CIRCUIT LOAD CENTER IN EACH DWELLING UNIT.

B. PROVIDE ARC-FAULT CIRCUIT BREAKERS FOR ALL 120-VOLT, 1-PHASE, 15-AMP AND 20-AMP BRANCH CIRCUITS.

C. ALL RECEPTACLES IN DWELLING UNITS TO BE TAMPER RESISTANT TYPE.

D. PROVIDE COMBINATION TYPE AFCI AND GFCI CIRCUIT BREAKER IN PANEL FOR RECEPTACLES WHERE EQUIPMENT BLOCKS THE TEST SWITCH DEVICES.

E. PROVIDE RECEPTACLES IN DWELLING UNITS SO THAT NO POINT MEASURED HORIZONTALLY ALONG THE FLOOR LINE OF ANY WALL SPACE IS MORE THAN 6-FEET FROM A RECEPTACLE.

F. REFER TO SHEET E6.1 FOR TYPICAL PANEL SCHEDULES.

SHEET KEYNOTES

1. VANITY MIRROR (ADL-4836JZ BY OTHERS) WITH INTEGRAL TOUCH SENSOR AND DIMMER. COORDINATE WITH OWNER PROJECT MANAGER FOR RECEPTACLE LOCATION. CIRCUIT DOWNSTREAM OF GFCI PROTECTED RECEPTACLE.

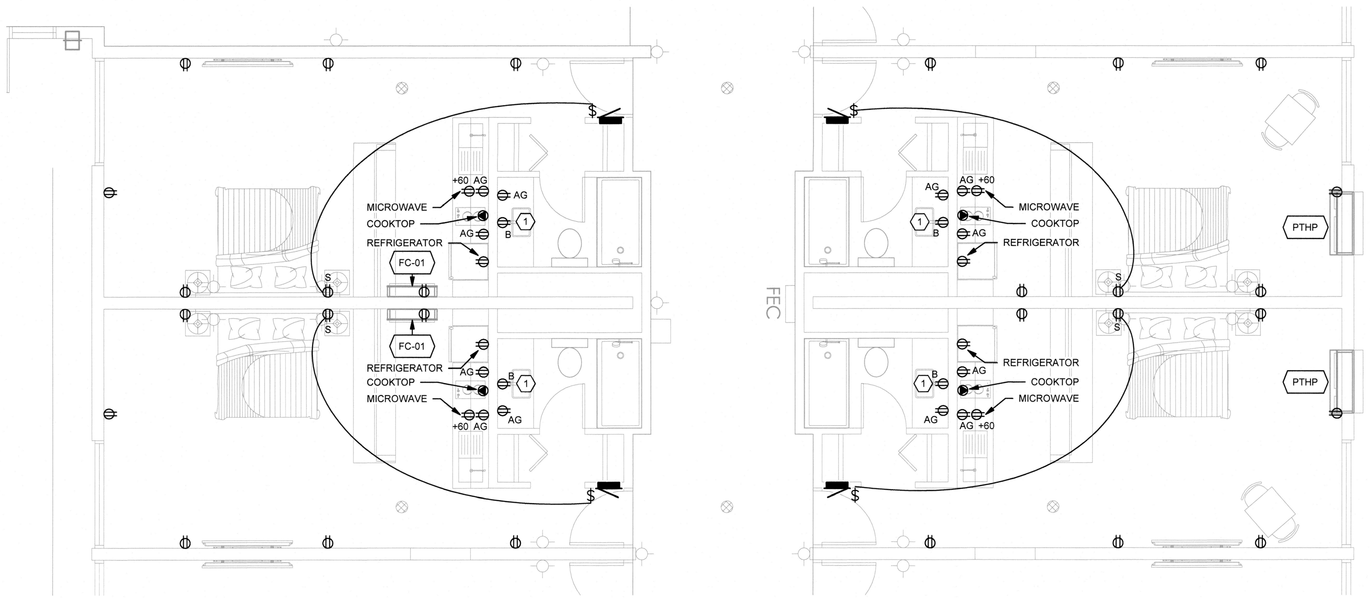

1 FLOOR PLAN TYPICAL UNITS - POWER

0' 2' 4' 8'
1/4" = 1'-0"

NOTE
ELECTRICAL CONTRACTOR MUST COMPLY WITH ALL 2017 NATIONAL ELECTRICAL / NEW MEXICO ELECTRICAL / NEW MEXICO ADMINISTRATIVE CODES
&
ELECTRICAL SYSTEMS AND EQUIPMENT SHALL COMPLY WITH THE 2018 COMMERICAL ENERGY CONSERVATION CODES FOR NEW MEXICO NMAC 14.7.9

INTERFACE ENGINEERING

PROJECT 2022-1135
CONTACT KRISTINE LEAVENS

100 SW Main Street, Suite 1600
Portland, OR 97204
TEL 503.382.2266
www.interfaceengineering.com

ACTIVE
PROFESSIONAL ENGINEER
STATE OF NEW MEXICO
JAMES R. SATTERFIELD
NEW MEXICO
27943
PROFESSIONAL ENGINEER
Digitally signed by Jim Satterfield
Reason: I am reviewing this document
Date: 2023.08.12
08:30:17-07'00'

RECEIVED
AUG 28 2023
CITY OF GALLUP
PLANNING & DEVELOPMENT
BY: TIME: 3:26PM

HAVEN LIVING
3009 W HISTORIC HWY 66
GALLUP, NM 87301

SHEET TITLE
ENLARGED UNIT PLANS - POWER

REVISIONS

DRAWN BY KCL
CHECKED BY MKO
JOB NO. 2022-1372
DATE 03/31/2023
SHEET NUMBER
E4.0

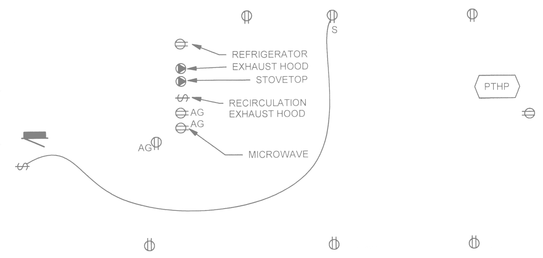

LARGED FLOOR PLAN TYPE A UNIT - POWER

0' 2' 4' 8'
= 1'-0"

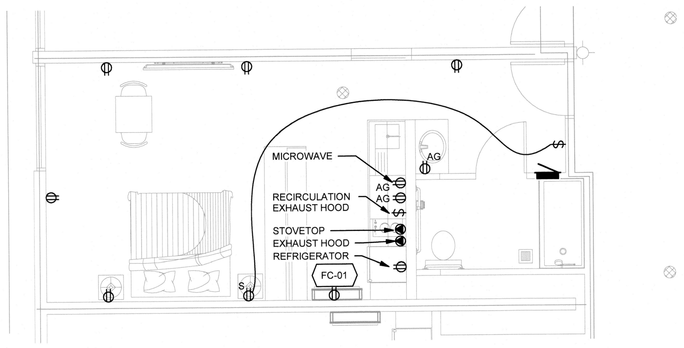

1 ENLARGED FLOOR PLAN TYPE A UNIT - POWER

0' 2' 4' 8'
1/4" = 1'-0"

2 E

0'
1/4

GENERAL SHEET NOTES

A. PROVIDE 100-AMP, 208-VOLT / 1-PHASE, 18-CIRCUIT LOAD CENTER IN EACH DWELLING UNIT.

B. PROVIDE ARC-FAULT CIRCUIT BREAKERS FOR ALL 120-VOLT, 1-PHASE, 15-AMP AND 20-AMP BRANCH CIRCUITS.

C. ALL RECEPTACLES IN DWELLING UNITS TO BE TAMPER RESISTANT TYPE.

D. PROVIDE COMBINATION TYPE AFCI AND GFCI CIRCUIT BREAKER IN PANEL FOR RECEPTACLES WHERE EQUIPMENT BLOCKS THE TEST SWITCH DEVICES.

E. PROVIDE RECEPTACLES IN DWELLING UNITS SO THAT NO POINT MEASURED HORIZONTALLY ALONG THE FLOOR LINE OF ANY WALL SPACE IS MORE THAN 6-FEET FROM A RECEPTACLE.

F. REFER TO SHEET E6.1 FOR TYPICAL PANEL SCHEDULES.

INTERFACE
ENGINEERING

PROJECT: 2022-1733
CONTACT: KRISTINE LEAVENS

700 SW Main Street, Suite 1600
Portland, OR 97204
TEL: 503.352.2040
www.interfaceengineering.com

JAMES R. SATTER
NEW MEXICO
27943
PROFESSIONAL ENGINEER

Digitally signed by Jim Satterfield
Reason: I am the author of this document
Date: 2023.05.12
08:30:15 PDT

RECEIVED

HAVEN LIVING

3009 W HISTORIC HWY 66
GALLUP, NM 87301

SHEET TITLE
ENLARGED ACCESSIBLE UNIT PLANS - POWER

REVISIONS

DRAWN BY: KCL
CHECKED BY: MKO
JOB NO: 2022-1372
DATE: 03/31/2023
SHEET NUMBER
E4.1

GENERAL SHEET NOTES

A. PROVIDE NEW UNIT LIGHTING PER LIGHTING CONSULTANT. CIRCUIT NEW LIGHTING TO NEW UNIT LOAD CENTER.

B. PROVIDE NEW LIGHTING CONTROLS IN EACH DWELLING UNIT.

C. REFER TO SHEET E6.1 FOR TYPICAL PANEL SCHEDULES.

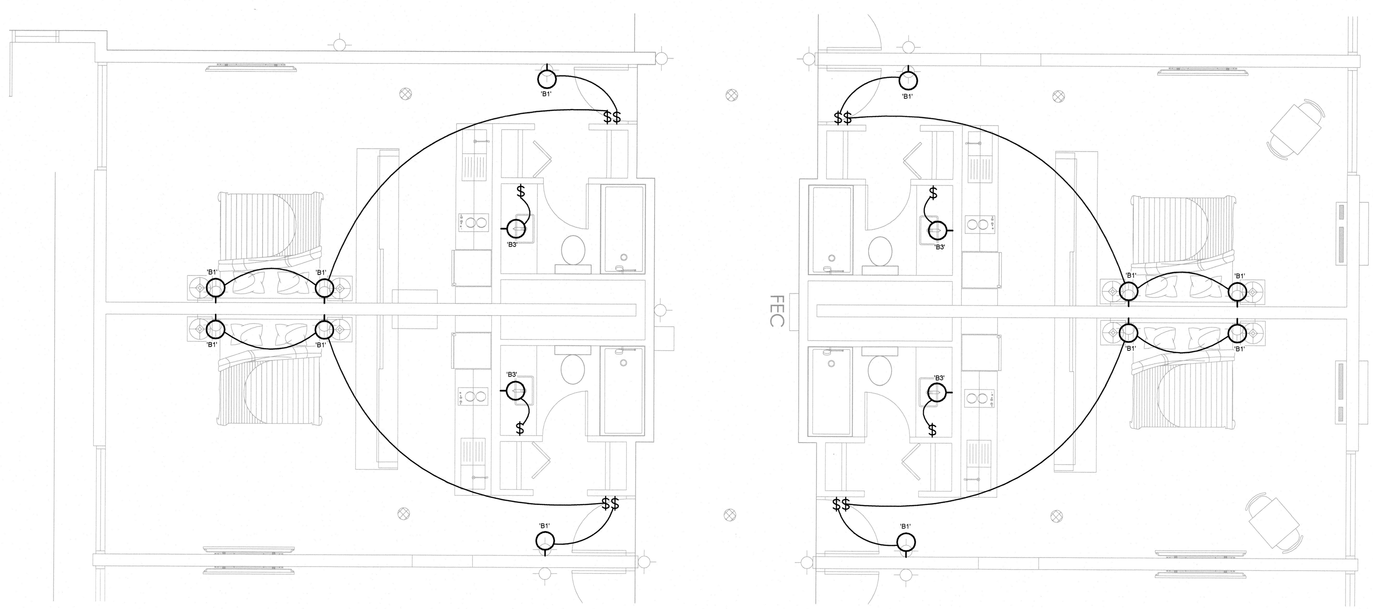

1 REFLECTED CEILING PLAN TYPICAL UNITS - LIGHTING

0' 2' 4' 8'
1/4" = 1'-0"

NOTE
ELECTRICAL CONTRACTOR MUST COMPLY WITH ALL 2017 NATIONAL ELECTRICAL / NEW MEXICO ELECTRICAL / NEW MEXICO ADMINISTRATIVE CODES
&
ELECTRICAL SYSTEMS AND EQUIPMENT SHALL COMPLY WITH THE 2018 COMMERICAL ENERGY CONSERVATION CODES FOR NEW MEXICO NMAC 14.7.9

INTERFACE ENGINEERING

PROJECT 2022-1135
CONTACT KRISTINE LEAVENS

100 SW Main Street, Suite 1600
Portland, OR 97204
TEL 503.382.2266
www.interfaceengineering.com

ACTIVE
PROFESSIONAL ENGINEER
STATE OF NEW MEXICO
JAMES R. SATTERLEE
NEW MEXICO
22413
PROFESSIONAL ENGINEER
Digitally signed by Satterlee, James R.
I have reviewed this document.
Date: 2023.08.18
08:30:17-07'00'

RECEIVED
AUG 28 2023
CITY OF GALLUP
PLANNING & DEVELOPMENT
BY: DTT TIME: 3:26 PM

HAVEN LIVING
3009 W HISTORIC HWY 66
GALLUP, NM 87301

SHEET TITLE
ENLARGED UNIT PLANS - LIGHTING

REVISIONS

DRAWN BY KCL
CHECKED BY MKO
JOB NO. 2022-1372
DATE 03/31/2023
SHEET NUMBER
E4.2

GENERAL SHEET NOTES

A. PROVIDE NEW UNIT LIGHTING PER LIGHTING CONSULTANT. CIRCUIT NEW LIGHTING TO NEW UNIT LOAD CENTER.

B. PROVIDE NEW LIGHTING CONTROLS IN EACH DWELLING UNIT.

C. REFER TO SHEET E6.1 FOR TYPICAL PANEL SCHEDULES.

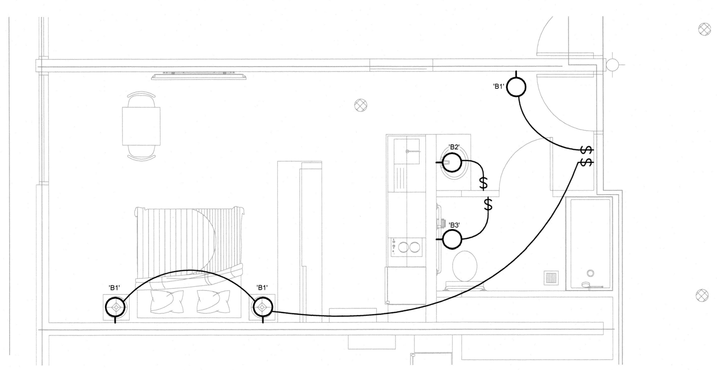

1 ENLARGED REFLECTED CEILING PLAN TYPE A UNIT - LIGHTING

0' 2' 4' 8'
1/4" = 1'-0"

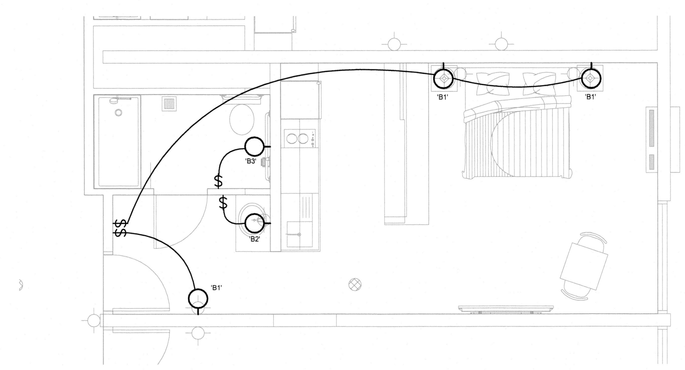

2 ENLARGED REFLECTED CEILING PLAN TYPE A UNIT - LIGHTING

0' 2' 4' 8'
1/4" = 1'-0"

NOTE
ELECTRICAL CONTRACTOR MUST COMPLY WITH ALL 2017 NATIONAL ELECTRICAL / NEW MEXICO ELECTRICAL / NEW MEXICO ADMINISTRATIVE CODES
&
ELECTRICAL SYSTEMS AND EQUIPMENT SHALL COMPLY WITH THE 2018 COMMERICAL ENERGY CONSERVATION CODES FOR NEW MEXICO NMAC 14.7.9

INTERFACE ENGINEERING

PROJECT 2022-1135
CONTACT KRISTINE LEAVENS

100 SW Main Street, Suite 1600
Portland, OR 97204
TEL 503.382.2266
www.interfaceengineering.com

ACTIVE
PROFESSIONAL ENGINEER
STATE OF NEW MEXICO
INTERFACE ENGINEERING INDUSTRIES
JAMES R. SATTERN
NEW MEXICO
27943
PROFESSIONAL ENGINEER
Digitally signed by Jim Sattern
Reason: I have reviewed this document
Date: 2023.08.28
08:33:17-07'00'

RECEIVED
AUG 28 2023
CITY OF GALLUP
PLANNING & DEVELOPMENT
BY: MT TIME: 3:26 PM

HAVEN LIVING

3009 W HISTORIC HWY 66
GALLUP, NM 87301

SHEET TITLE
ENLARGED ACCESSIBLE UNIT PLANS - LIGHTING

REVISIONS

DRAWN BY KCL
CHECKED BY MKO
JOB NO. 2022-1372
DATE 03/31/2023
SHEET NUMBER
E4.3

GROUNDING ELECTRODE CONDUCTOR FOR AC SYSTEMS

PER TABLE 250.66 N.E.C.

SIZE OF LARGEST SERVICDE ENTRANCE CONDUCTOR OR EQUIVALENT AREA FOR PARALLEL CONDUCTORS (AWG/kcmil)		SIZE OF GROUNDING ELECTRODE CONDUCTOR	
COPPER	ALUMINUM OR COPPER-CLAD ALUMINUM	COOPER	ALUMINUM OR COPPER-CLAD ALUMINUM
2 OR SMALLER	1/0 OR SMALLER	8	6
1 OR 1/0	2/0 OR 3/0	6	4
2/0 OR 3/0	4/0 OR 250 kcmil	4	2
4/0 THRU 350 kcmil	300 kcmil THROUGH 500 kcmil	2	1/0
400 kcmil THROUGH 600 kcmil	600 kcmil THROUGH 900 kcmil	1/0	3/0
750 Kcmil THROUGH 1100 kcmil	1000 kcmil THROUGH 1750 kcmil	2/0	4/0
OVER 1100 kcmil	OVER 1750 kcmil	3/0	250

WHERE MULTIPLE SETS OF SERVICE-ENTRANCE CONDUCTORS ARE USED AS PERMITTED IN N.E.C. ARTICLE 230.40, EXCEPTION NO. 2, THE EQUIVALENT SIZE OF THE LARGEST SERVICE-ENTRANCE CONDUCTOR SHALL BE DETERMINED BY THE SUM OF THE AREAS OF THE CORRESPONDING CONDUCTORS OF EACH SET. WHERE THERE ARE NO SERVICE-ENTRANCE CONDUCTORS, THE GROUNDING ELECTRODE CONDUCTOR SIZE SHALL BE DETERMINED BY THE EQUIVALENT SIZE OF THE LARGEST SERVICE ENTRANCE CONDUCTOR REQUIRED FOR THE LOAD TO BE SERVED. SIZE THE MAIN BONDING JUMPER PER NEC 250.102 (C)(1)

MINIMUM SIZE EQUIPMENT GROUNDING CONDUCTORS FOR GROUNDING RACEWAY & EQUIPMENT

PER TABLE 250.122 N.E.C.

RATING OR SETTING OF AUTOMATIC OVER CURRENT DEVICE IN CIRCUIT AHEAD OF EQUIPMENT, CONDUIT ETC. NOT EXCEEDING (AMPERES)	SIZE (AWG/kcmil)	
	COOPER	ALUMINUM OR COPPER-CLAD ALUMINUM
15	14	12
20	12	10
30	10	8
40	10	8
60	10	8
100	8	6
200	6	4
300	4	2
400	3	1
500	2	1/0
600	1	2/0
800	1/0	3/0
1000	2/0	4/0
1200	3/0	250
1600	4/0	350
2000	250	400
2500	350	600
3000	400	600
4000	500	750
5000	700	1200
6000	800	1200

AIC RATINGS SCHEDULE

PANELBOARDS AND SWITCHBOARDS

120/208/240V

UP TO 125 AMPS: 10KAIC MINIMUM
200 TO 400 AMPS: 14KAIC MINIMUM
600 TO 1200 AMPS: 42KAIC MINIMUM
1600 TO 2000 AMPS: 65KAIC MINIMUM
2500 TO 4000 AMPS: 65KAIC MINIMUM

277/480V

UP TO 125 AMPS: 14KAIC MINIMUM
200 TO 400 AMPS: 22KAIC MINIMUM
600 TO 1200 AMPS: 42KAIC MINIMUM
1600 TO 2000 AMPS: 65KAIC MINIMUM
2500 TO 4000 AMPS: 65KAIC MINIMUM

FEEDER SCHEDULE

A,C,S,X A=Aluminum
C=Conduit only
X=Seperately derived system
G=Upsized ground due to voltage drop

(E) EXISTING FEEDER

(X) DEMOLISH FEEDER

703A 3 #2 AL, 1 #8 CU GND., IN 1 1/4" C.

1003AG 3 #1/0 AL, 1 #6 CU GND., IN 1 1/2" C.

1253AG 3 #2/0 AL, 1 #4 CU GND., IN 1 1/2" C.

2004A 4 - 250 kcmil AL, 1 #6 CU GND., IN 2 1/2" C.

2504AG 4 - 350 kcmil AL, 1 #4 CU GND., IN 3" C.

3503A 2 SETS OF (3 #4/0 AL, 1 #2 CU GND., IN 2" C.)

4004A 2 SETS OF (4 - 250 kcmil AL, 1 #2 CU GND., IN 2 1/2" C.)

8004AX 3 SETS OF (4 - 400 kcmil AL, 1 #3/0 CU GND., IN 3" C.)

GENERAL SHEET NOTES

A. MEASURE LOAD OF MAIN SWITCHBOARD FOR MINIMUM 30-DAY PERIOD MEETING NEC 220.87 REQUIREMENTS. SUBMIT MEASUEMENTS TO ARCHITECT FOR ENGINEER REVIEW OF LOADS ON SWITCHBOARD.

B. MAXIMUM FAULT CURRENT CALCULATED FOR UNIT LOAD CENTERS IS 6,102A RMS.

C. PROVIDE (4) NEW 250-AMP, 208-VOLT / 3-PHASE DISTRIBUTION PANELBOARDS TO SERVE NEW UNIT LOAD CENTERS. DISTRIBUTION PANELBOARDS TO SERVE THE FOLLOWING QUANTITY OF UNIT LOAD CENTERS.

LEVEL 1, NORTH: (12) INTERIOR UNITS; (14) NORTH UNITS
LEVEL 1, SOUTH: (14) INTERIOR UNITS; (17) SOUTH UNITS; (2) WEST UNITS
LEVEL 2, NORTH: (14) INTERIOR UNITS; (14) NORTH UNITS
LEVEL 2, SOUTH: (15) INTERIOR UNITS; (17) SOUTH UNITS; (7) WEST UNITS

NOTE
ELECTRICAL CONTRACTOR MUST COMPLY WITH ALL 2017 NATIONAL ELECTRICAL / NEW MEXICO ELECTRICAL / NEW MEXICO ADMINISTRATIVE CODES
&
ELECTRICAL SYSTEMS AND EQUIPMENT SHALL COMPLY WITH THE 2018 COMMERICAL ENERGY CONSERVATION CODES FOR NEW MEXICO NMAC 14.7.9

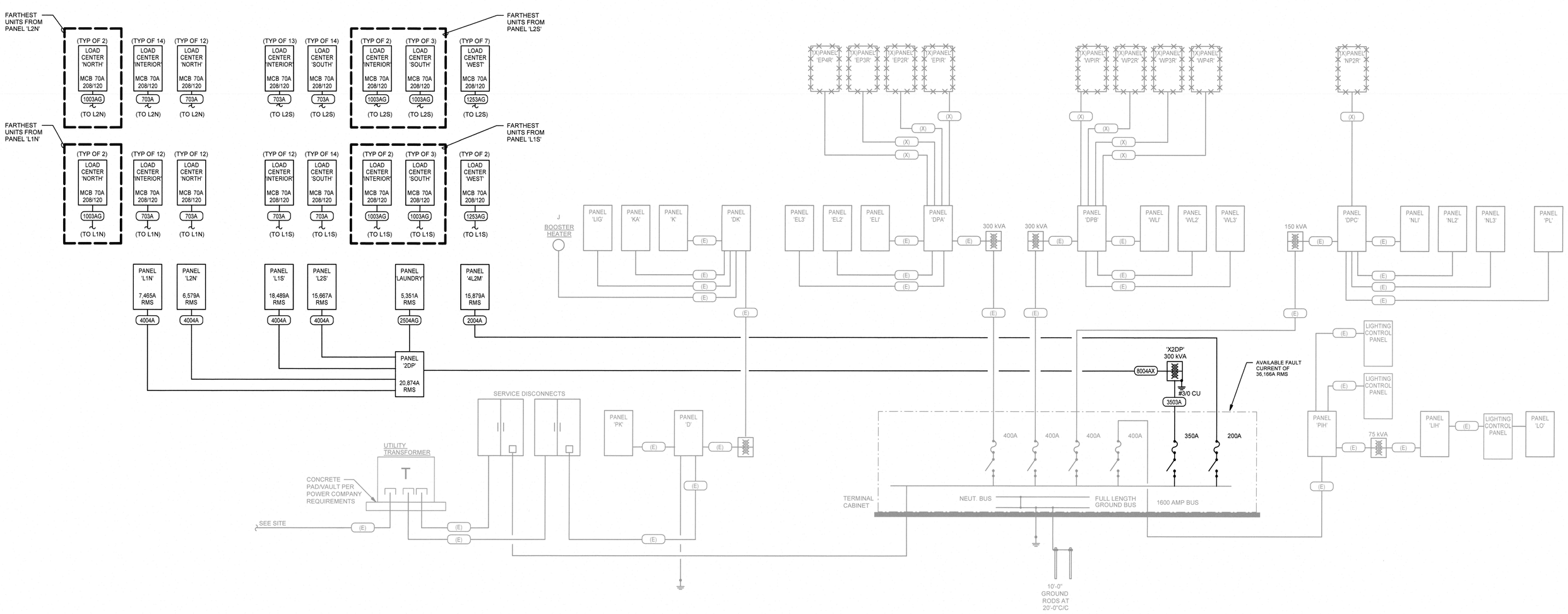

1 EXISTING ONE-LINE POWER DISTRIBUTION DIAGRAM

NO SCALE

INTERFACE ENGINEERING
PROJECT 2022-1135
CONTACT KRISTINE LEAVENS
100 SW Main Street, Suite 1600
Portland, OR 97204
TEL 503.382.2266
www.interfaceengineering.com

ACTIVE
PROFESSIONAL ENGINEER
STATE OF NEW MEXICO
JAMES R. SATHOM
NEW MEXICO
27943
PROFESSIONAL ENGINEER
Digitally signed by Jim Sathom
Reason: I have reviewed this document
Date: 2023.08.18
08:55:17-07'00'

RECEIVED
AUG 28 2023
CITY OF GALLUP
PLANNING & DEVELOPMENT
BY: WT TIME: 2:26 PM

HAVEN LIVING
3009 W HISTORIC HWY 66
GALLUP, NM 87301

SHEET TITLE
SINGLE LINE DIAGRAMS - ELECTRICAL

REVISIONS

DRAWN BY KCL
CHECKED BY MKO
JOB NO. 2022-1372
DATE 03/31/2023
SHEET NUMBER
E5.1

Panel '2DP'

120/208V, 3 Ph., 4 W.; 800A Bus with 800A Main Circuit Breaker Surface Mounted Panelboard

2022-1372

Ckt. No.	Description / Location	Load (VA)	Type	C.B. A/Pole	Note	Ph.	Note	C.B. A/Pole	Load (VA)	Type	Description / Location	Ckt. No.
1	Panel 'L1N'	75,926	S	400/3		A		400/3	105,760	S	Panel 'L1S'	2
3	---	77,594	S	-		B		-	97,630	S	---	4
5	---	67,928	S	-		C		-	99,376	S	---	6
7	Panel 'L2N'	84,910	S	400/3		A		400/3	126,408	S	Panel 'L2S'	8
9	---	77,954	S	-		B		-	123,334	S	---	10
11	---	76,144	S	-		C		-	116,904	S	---	12
13	Panel 'Laundry'	11,530	S	200/3		A					BUSSED SPACE	14
15	---	11,490	S	-		B					BUSSED SPACE	16
17	---	11,500	S	-		C					BUSSED SPACE	18
19	BUSSED SPACE					A					BUSSED SPACE	20
21	BUSSED SPACE					B					BUSSED SPACE	22
23	BUSSED SPACE					C					BUSSED SPACE	24
25	BUSSED SPACE					A					BUSSED SPACE	26
27	BUSSED SPACE					B					BUSSED SPACE	28
29	BUSSED SPACE					C					BUSSED SPACE	30
31	BUSSED SPACE					A					BUSSED SPACE	32
33	BUSSED SPACE					B					BUSSED SPACE	34
35	BUSSED SPACE					C					BUSSED SPACE	36
37	BUSSED SPACE					A					BUSSED SPACE	38
39	BUSSED SPACE					B					BUSSED SPACE	40
41	BUSSED SPACE					C					BUSSED SPACE	42

Total Connected Load: Ph. A 404,534 VA 3,369 Amps
Total Connected Load: Ph. B 388,002 VA 3,231 Amps
Total Connected Load: Ph. C 371,852 VA 3,096 Amps
Panel Connected Load: 0.0 KVA 0.0 Amps
Sub-Fed Connected Load: 800.3 KVA 2221.5 Amps
Total Demand Load: 213.8 **KVA** 593.4 **Amps**

Notes:

Accessories:

Load Type	Load Description	Connected Loads	Subfed Loads (S)	Total Loads	Demand Factor	Demand Load
G	General (Non-Continuous)	0.00	0.00	0.00	100%	0.00 (KVA Typical)
L	Lighting	0.00	0.00	0.00	125%	0.00
R	Receptacles - to 10 KVA	0.00	3.78	3.78	100%	3.78
	over 10 KVA		0.00	0.00	50%	0.00
K	Kitchen (Non-Dwelling)	0.00	0.00	0.00	100%	0.00
H	Heating	0.00	30.00	30.00	100%	30.00
M	Motors	0.00	3.79	3.79	100%	3.79
LM	Largest Motor	0.00	0.75	0.75	125%	0.94
WH	Water Heater	0.00	0.00	0.00	125%	0.00
C	Continuous General Load	0.00	0.00	0.00	125%	0.00
DL	Multifamily Demand Load (126 Dwelling Units)	0.00	762.01	762.01	23%	175.26
					Total:	213.77 **KVA**

Panel 'L1N'

120/208V, 3 Ph., 4 W.; 400A Bus with Main Lug Only Surface Mounted Panelboard

2022-1372

Ckt. No.	Description / Location	Load (VA)	Type	C.B. A/Pole	Note	Ph.	Note	C.B. A/Pole	Load (VA)	Type	Description / Location	Ckt. No.
1	UNIT-NORTH	3,999	DL	70/2		A		70/2	3,999	DL	UNIT-NORTH	2
3	---	4,833	DL	-		B		-	4,833	DL	---	4
5	UNIT-NORTH	3,999	DL	70/2		C		70/2	3,999	DL	UNIT-NORTH	6
7	---	4,833	DL	-		A		-	4,833	DL	---	8
9	UNIT-NORTH	3,999	DL	70/2		B		70/2	3,999	DL	UNIT-NORTH	10
11	---	4,833	DL	-		C		-	4,833	DL	---	12
13	UNIT-NORTH	3,999	DL	70/2		A		70/2	3,999	DL	UNIT-NORTH	14
15	---	4,833	DL	-		B		-	4,833	DL	---	16
17	UNIT-NORTH	3,999	DL	70/2		C		70/2	3,999	DL	UNIT-NORTH	18
19	---	4,833	DL	-		A		-	4,833	DL	---	20
21	UNIT-NORTH	3,999	DL	70/2		B		70/2	3,999	DL	UNIT-NORTH	22
23	---	4,833	DL	-		C		-	4,833	DL	---	24
25	UNIT-NORTH	3,999	DL	70/2		A		70/2	3,999	DL	UNIT-NORTH	26
27	---	4,833	DL	-		B		-	4,833	DL	---	28
29	UNIT - INTERIOR	3,658	DL	70/2		C		70/2	3,658	DL	UNIT - INTERIOR	30
31	---	4,492	DL	-		A		-	4,492	DL	---	32
33	UNIT - INTERIOR	3,658	DL	70/2		B		70/2	3,658	DL	UNIT - INTERIOR	34
35	---	4,492	DL	-		C		-	4,492	DL	---	36
37	UNIT - INTERIOR	3,658	DL	70/2		A		70/2	3,658	DL	UNIT - INTERIOR	38
39	---	4,492	DL	-		B		-	4,492	DL	---	40
41	UNIT - INTERIOR	3,658	DL	70/2		C		70/2	3,658	DL	UNIT - INTERIOR	42
43	---	4,492	DL	-		A		-	4,492	DL	---	44
45	UNIT - INTERIOR	3,658	DL	70/2		B		70/2	3,658	DL	UNIT - INTERIOR	46
47	---	4,492	DL	-		C		-	4,492	DL	---	48
49	UNIT - INTERIOR	3,658	DL	70/2		A		70/2	3,658	DL	UNIT - INTERIOR	50
51	---	4,492	DL	-		B		-	4,492	DL	---	52
53	BUSSED SPACE					C					BUSSED SPACE	54
55	BUSSED SPACE					A					BUSSED SPACE	56
57	BUSSED SPACE					B					BUSSED SPACE	58
59	BUSSED SPACE					C					BUSSED SPACE	60

Total Connected Load: Ph. A 75,926 VA 632 Amps
Total Connected Load: Ph. B 77,594 VA 646 Amps
Total Connected Load: Ph. C 67,928 VA 566 Amps
Panel Connected Load: 179.9 KVA 499.3 Amps
Sub-Fed Connected Load: 0.0 KVA 0.0 Amps
Total Demand Load: 61.2 **KVA** 169.7 **Amps**

Notes:

Accessories:

Load Type	Load Description	Connected Loads	Subfed Loads (S)	Total Loads	Demand Factor	Demand Load
G	General (Non-Continuous)	0.00	0.00	0.00	100%	0.00 (KVA Typical)
L	Lighting	0.00	0.00	0.00	125%	0.00
R	Receptacles - to 10 KVA	0.00	0.00	0.00	100%	0.00
	over 10 KVA		0.00	0.00	50%	0.00
K	Kitchen (Non-Dwelling)	0.00	0.00	0.00	100%	0.00
H	Heating	0.00	0.00	0.00	100%	0.00
M	Motors	0.00	0.00	0.00	100%	0.00
LM	Largest Motor	0.00	0.00	0.00	125%	0.00
WH	Water Heater	0.00	0.00	0.00	125%	0.00
C	Continuous General Load	0.00	0.00	0.00	125%	0.00
DL	Multifamily Demand Load (26 Dwelling Units)	179.86	0.00	179.86	34%	61.15
					Total:	61.15 **KVA**

Panel 'L1S'

120/208V, 3 Ph., 4 W.; 400A Bus with Main Lug Only Surface Mounted Panelboard

2022-1372

Ckt. No.	Description / Location	Load (VA)	Type	C.B. A/Pole	Note	Ph.	Note	C.B. A/Pole	Load (VA)	Type	Description / Location	Ckt. No.
1	UNIT-WEST	5,122	DL	70/2		A		70/2	5,122	DL	UNIT-WEST	2
3	---	5,956	DL	-		B		-	5,956	DL	---	4
5	UNIT-SOUTH	4,448	DL	70/2		C		70/2	4,448	DL	UNIT-SOUTH	6
7	---	5,282	DL	-		A		-	5,282	DL	---	8
9	UNIT-SOUTH	4,448	DL	70/2		B		70/2	4,448	DL	UNIT-SOUTH	10
11	---	5,282	DL	-		C		-	5,282	DL	---	12
13	UNIT-SOUTH	4,448	DL	70/2		A		70/2	4,448	DL	UNIT-SOUTH	14
15	---	5,282	DL	-		B		-	5,282	DL	---	16
17	UNIT-SOUTH	4,448	DL	70/2		C		70/2	4,448	DL	UNIT-SOUTH	18
19	---	5,282	DL	-		A		-	5,282	DL	---	20
21	UNIT-SOUTH	4,448	DL	70/2		B		70/2	4,448	DL	UNIT-SOUTH	22
23	---	5,282	DL	-		C		-	5,282	DL	---	24
25	UNIT-SOUTH	4,448	DL	70/2		A		70/2	4,448	DL	UNIT-SOUTH	26
27	---	5,282	DL	-		B		-	5,282	DL	---	28
29	UNIT-SOUTH	4,448	DL	70/2		C		70/2	4,448	DL	UNIT-SOUTH	30
31	---	5,282	DL	-		A		-	5,282	DL	---	32
33	UNIT-SOUTH	4,448	DL	70/2		B		70/2	4,448	DL	UNIT-SOUTH	34
35	---	5,282	DL	-		C		-	5,282	DL	---	36
37	UNIT-SOUTH	4,448	DL	70/2		A					BUSSED SPACE	38
39	---	5,282	DL	-		B					BUSSED SPACE	40
41	UNIT - INTERIOR	3,658	DL	70/2		C		70/2	3,658	DL	UNIT - INTERIOR	42
43	---	4,492	DL	-		A		-	4,492	DL	---	44
45	UNIT - INTERIOR	3,658	DL	70/2		B		70/2	3,658	DL	UNIT - INTERIOR	46
47	---	4,492	DL	-		C		-	4,492	DL	---	48
49	UNIT - INTERIOR	3,658	DL	70/2		A		70/2	3,658	DL	UNIT - INTERIOR	50
51	---	4,492	DL	-		B		-	4,492	DL	---	52
53	UNIT - INTERIOR	3,658	DL	70/2		C		70/2	3,658	DL	UNIT - INTERIOR	54
55	---	4,492	DL	-		A		-	4,492	DL	---	56
57	UNIT - INTERIOR	3,658	DL	70/2		B		70/2	3,658	DL	UNIT - INTERIOR	58
59	---	4,492	DL	-		C		-	4,492	DL	---	60
61	UNIT - INTERIOR	3,658	DL	70/2		A		70/2	3,658	DL	UNIT - INTERIOR	62
63	---	4,492	DL	-		B		-	4,492	DL	---	64
65	UNIT - INTERIOR	3,658	DL	70/2		C		70/2	3,658	DL	UNIT - INTERIOR	66
67	---	4,492	DL	-		A		-	4,492	DL	---	68
69	FSDs	20	M	20/1		B					BUSSED SPACE	70
71	R - GYM / YOGA	540	R	20/1		C		20/1	540	R	R - GYM / MUSIC	72

Total Connected Load: Ph. A 105,760 VA 881 Amps
Total Connected Load: Ph. B 97,630 VA 813 Amps
Total Connected Load: Ph. C 99,376 VA 828 Amps
Panel Connected Load: 196.0 KVA 544.0 Amps
Sub-Fed Connected Load: 0.0 KVA 0.0 Amps
Total Demand Load: 61.5 **KVA** 170.8 **Amps**

Notes:

Accessories:

Load Type	Load Description	Connected Loads	Subfed Loads (S)	Total Loads	Demand Factor	Demand Load
G	General (Non-Continuous)	0.00	0.00	0.00	100%	0.00 (KVA Typical)
L	Lighting	0.00	0.00	0.00	125%	0.00
R	Receptacles - to 10 KVA	1.08	0.00	1.08	100%	1.08
	over 10 KVA		0.00	0.00	50%	0.00
K	Kitchen (Non-Dwelling)	0.00	0.00	0.00	100%	0.00
H	Heating	0.00	0.00	0.00	100%	0.00
M	Motors	0.00	0.00	0.00	100%	0.00
LM	Largest Motor	0.02	0.00	0.02	125%	0.03
WH	Water Heater	0.00	0.00	0.00	125%	0.00
C	Continuous General Load	0.00	0.00	0.00	125%	0.00
DL	Multifamily Demand Load (33 Dwelling Units)	194.88	0.00	194.88	31%	60.41
					Total:	61.52 **KVA**

Panel 'Laundry'

120/208V, 3 Ph., 4 W.; 200A Bus with 200A Main Circuit Breaker Surface Mounted Panelboard

2022-1372

Ckt. No.	Description / Location	Load (VA)	Type	C.B. A/Pole	Note	Ph.	Note	C.B. A/Pole	Load (VA)	Type	Description / Location	Ckt. No.
1	WASHER - 1	750	M	20/1		A		30/2	2,500	H	DRYER - 1	2
3	WASHER - 2	750	M	20/1		B		-	2,500	H	---	4
5	WASHER - 3	750	M	20/1		C		30/2	2,500	H	DRYER - 2	6
7	WASHER - 4	750	M	20/1		A		-	2,500	H	---	8
9	WASHER - 5	740	M	20/1		B		30/2	2,500	H	DRYER - 3	10
11	WASHER - 6	750	M	20/1		C		-	2,500	H	---	12
13	FSDs - WEST	30	M	20/1		A		30/2	2,500	H	DRYER - 4	14
15	SPARE			20/1		B		-	2,500	H	---	16
17	SPARE			20/1		C		30/2	2,500	H	DRYER - 5	18
19	SPARE			20/1		A		-	2,500	H	---	20
21	SPARE			20/1		B		30/2	2,500	H	DRYER - 6	22
23	SPARE			20/1		C		-	2,500	H	---	24
25	SPARE			20/1		A		20/1			SPARE	26
27	SPARE			20/1		B		20/1			SPARE	28
29	SPARE			20/1		C		20/1			SPARE	30

Total Connected Load: Ph. A 11,530 VA 96 Amps
Total Connected Load: Ph. B 11,490 VA 96 Amps
Total Connected Load: Ph. C 11,500 VA 96 Amps
Panel Connected Load: 34.5 KVA 95.8 Amps
Sub-Fed Connected Load: 0.0 KVA 0.0 Amps
Total Demand Load: 34.7 **KVA** 96.3 **Amps**

Notes:

Accessories:

Load Type	Load Description	Connected Loads	Subfed Loads (S)	Total Loads	Demand Factor	Demand Load
G	General (Non-Continuous)	0.00	0.00	0.00	100%	0.00 (KVA Typical)
L	Lighting	0.00	0.00	0.00	125%	0.00
R	Receptacles - to 10 KVA	0.00	0.00	0.00	100%	0.00
	over 10 KVA		0.00	0.00	50%	0.00
K	Kitchen (Non-Dwelling)	0.00	0.00	0.00	100%	0.00
H	Heating	30.00	0.00	30.00	100%	30.00
M	Motors	3.77	0.00	3.77	100%	3.77
LM	Largest Motor	0.75	0.00	0.75	125%	0.94
WH	Water Heater	0.00	0.00	0.00	125%	0.00
C	Continuous General Load	0.00	0.00	0.00	125%	0.00
DL	Multifamily Demand Load (Dwelling Units)	0.00	0.00	0.00	100%	0.00
					Total:	34.71 **KVA**

Panel 'L2N'

120/208V, 3 Ph., 4 W.; 400A Bus with Main Lug Only Surface Mounted Panelboard

2022-1372

Ckt. No.	Description / Location	Load (VA)	Type	C.B. A/Pole	Note	Ph.	Note	C.B. A/Pole	Load (VA)	Type	Description / Location	Ckt. No.
1	UNIT-NORTH	3,999	DL	70/2		A		70/2	3,999	DL	UNIT-NORTH	2
3	---	4,833	DL	-		B		-	4,833	DL	---	4
5	UNIT-NORTH	3,999	DL	70/2		C		70/2	3,999	DL	UNIT-NORTH	6
7	---	4,833	DL	-		A		-	4,833	DL	---	8
9	UNIT-NORTH	3,999	DL	70/2		B		70/2	3,999	DL	UNIT-NORTH	10
11	---	4,833	DL	-		C		-	4,833	DL	---	12
13	UNIT-NORTH	3,999	DL	70/2		A		70/2	3,999	DL	UNIT-NORTH	14
15	---	4,833	DL	-		B		-	4,833	DL	---	16
17	UNIT-NORTH	3,999	DL	70/2		C		70/2	3,999	DL	UNIT-NORTH	18
19	---	4,833	DL	-		A		-	4,833	DL	---	20
21	UNIT-NORTH	3,999	DL	70/2		B		70/2	3,999	DL	UNIT-NORTH	22
23	---	4,833	DL	-		C		-	4,833	DL	---	24
25	UNIT-NORTH	3,999	DL	70/2		A		70/2	3,999	DL	UNIT-NORTH	26
27	---	4,833	DL	-		B		-	4,833	DL	---	28
29	UNIT - INTERIOR	3,658	DL	70/2		C		70/2	3,658	DL	UNIT - INTERIOR	30
31	---	4,492	DL	-		A		-	4,492	DL	---	32
33	UNIT - INTERIOR	3,658	DL	70/2		B		70/2	3,658	DL	UNIT - INTERIOR	34
35	---	4,492	DL	-		C		-	4,492	DL	---	36
37	UNIT - INTERIOR	3,658	DL	70/2		A		70/2	3,658	DL	UNIT - INTERIOR	38
39	---	4,492	DL	-		B		-	4,492	DL	---	40
41	UNIT - INTERIOR	3,658	DL	70/2		C		70/2	3,658	DL	UNIT - INTERIOR	42
43	---	4,492	DL	-		A		-	4,492	DL	---	44
45	UNIT - INTERIOR	3,658	DL	70/2		B		70/2	3,658	DL	UNIT - INTERIOR	46
47	---	4,492	DL	-		C		-	4,492	DL	---	48
49	UNIT - INTERIOR	3,658	DL	70/2		A		70/2	3,658	DL	UNIT - INTERIOR	50
51	---	4,492	DL	-		B		-	4,492	DL	---	52
53	UNIT - INTERIOR	3,658	DL	70/2		C		70/2	3,658	DL	UNIT - INTERIOR	54
55	---	4,492	DL	-		A		-	4,492	DL	---	56
57	R - ROOF EAST	360	R	20/1		B					BUSSED SPACE	58
59	R - ROOF NORTH	900	R	20/1		C					BUSSED SPACE	60

Total Connected Load: Ph. A 84,910 VA 707 Amps
Total Connected Load: Ph. B 77,954 VA 649 Amps
Total Connected Load: Ph. C 76,144 VA 634 Amps
Panel Connected Load: 181.1 KVA 502.7 Amps
Sub-Fed Connected Load: 0.0 KVA 0.0 Amps
Total Demand Load: 60.6 **KVA** 168.3 **Amps**

Notes:

Accessories:

Load Type	Load Description	Connected Loads	Subfed Loads (S)	Total Loads	Demand Factor	Demand Load
G	General (Non-Continuous)	0.00	0.00	0.00	100%	0.00 (KVA Typical)
L	Lighting	0.00	0.00	0.00	125%	0.00
R	Receptacles - to 10 KVA	1.26	0.00	1.26	100%	1.26
	over 10 KVA		0.00	0.00	50%	0.00
K	Kitchen (Non-Dwelling)	0.00	0.00	0.00	100%	0.00
H	Heating	0.00	0.00	0.00	100%	0.00
M	Motors	0.00	0.00	0.00	100%	0.00
LM	Largest Motor	0.00	0.00	0.00	125%	0.00
WH	Water Heater	0.00	0.00	0.00	125%	0.00
C	Continuous General Load	0.00	0.00	0.00	125%	0.00
DL	Multifamily Demand Load (28 Dwelling Units)	179.86	0.00	179.86	33%	59.36
					Total:	60.62 **KVA**

Panel 'L2S'

120/208V, 3 Ph., 4 W.; 400A Bus with Main Lug Only Surface Mounted Panelboard

2022-1372

Ckt. No.	Description / Location	Load (VA)	Type	C.B. A/Pole	Note	Ph.	Note	C.B. A/Pole	Load (VA)	Type	Description / Location	Ckt. No.
1	UNIT-SOUTH	4,448	DL	70/2		A		70/2	5,122	DL	UNIT-WEST	2
3	---	5,282	DL	-		B		-	5,956	DL	---	4
5	UNIT-SOUTH	4,448	DL	70/2		C		70/2	5,122	DL	UNIT-WEST	6
7	---	5,282	DL	-		A		-	5,956	DL	---	8
9	UNIT-SOUTH	4,448	DL	70/2		B		70/2	5,122	DL	UNIT-WEST	10
11	---	5,282	DL	-		C		-	5,956	DL	---	12
13	UNIT-SOUTH	4,448	DL	70/2		A		70/2	5,122	DL	UNIT-WEST	14
15	---	5,282	DL	-		B		-	5,956	DL	---	16
17	UNIT-SOUTH	4,448	DL	70/2		C		70/2	5,122	DL	UNIT-WEST	18
19	---	5,282	DL	-		A		-	5,956	DL	---	20
21	UNIT-SOUTH	4,448	DL	70/2		B		70/2	5,122	DL	UNIT-WEST	22
23	---	5,282	DL	-		C		-	5,956	DL	---	24
25	UNIT-SOUTH	4,448	DL	70/2		A		70/2	5,122	DL	UNIT-WEST	26
27	---	5,282	DL	-		B		-	5,956	DL	---	28
29	UNIT-SOUTH	4,448	DL	70/2		C		70/2	3,658	DL	UNIT-INTERIOR	30
31	---	5,282	DL	-		A		-	4,492	DL	---	32
33	UNIT-SOUTH	4,448	DL	70/2		B		70/2	3,658	DL	UNIT-INTERIOR	34
35	---	5,282	DL	-		C		-	4,492	DL	---	36
37	UNIT-SOUTH	4,448	DL	70/2		A		70/2	3,658	DL	UNIT-INTERIOR	38
39	---	5,282	DL	-		B		-	4,492	DL	---	40
41	UNIT-SOUTH	4,448	DL	70/2		C		70/2	3,658	DL	UNIT-INTERIOR	42
43	---	5,282	DL	-		A		-	4,492	DL	---	44
45	UNIT-SOUTH	4,448	DL	70/2		B		70/2	3,658	DL	UNIT-INTERIOR	46
47	---	5,282	DL	-		C		-	4,492	DL	---	48
49	UNIT-SOUTH	4,448	DL	70/2		A		70/2	3,658	DL	UNIT-INTERIOR	50
51	---	5,282	DL	-		B		-	4,492	DL	---	52
53	UNIT-SOUTH	4,448	DL	70/2		C		70/2	3,658	DL	UNIT-INTERIOR	54
55	---	5,282	DL	-		A		-	4,492	DL	---	56
57	UNIT-SOUTH	4,448	DL	70/2		B		70/2	3,658	DL	UNIT-INTERIOR	58
59	---	5,282	DL	-		C		-	4,492	DL	---	60
61	UNIT-SOUTH	4,448	DL	70/2		A		70/2	3,658	DL	UNIT-INTERIOR	62
63	---	5,282	DL	-		B		-	4,492	DL	---	64
65	UNIT-SOUTH	4,448	DL	70/2		C		70/2	3,658	DL	UNIT-INTERIOR	66
67	---	5,282	DL	-		A		-	4,492	DL	---	68
69	UNIT-INTERIOR	3,658	DL	70/2		B		70/2	3,658	DL	UNIT-INTERIOR	70
71	---	4,492	DL	-		C		-	4,492	DL	---	72
73	UNIT-INTERIOR	3,658	DL	70/2		A		70/2	3,658	DL	UNIT-INTERIOR	74
75	---	4,492	DL	-		B		-	4,492	DL	---	76
77	UNIT-INTERIOR	3,658	DL	70/2		C					BUSSED SPACE	78
79	---	4,492	DL	-		A					BUSSED SPACE	80
81	R - ROOF EAST	540	R	20/1		B					BUSSED SPACE	82
83	R - ROOF SOUTH	900	R	20/1		C					BUSSED SPACE	84

Total Connected Load: Ph. A 126,408 VA 1,053 Amps
Total Connected Load: Ph. B 123,334 VA 1,027 Amps
Total Connected Load: Ph. C 116,904 VA 973 Amps
Panel Connected Load: 208.8 KVA 579.7 Amps
Sub-Fed Connected Load: 0.0 KVA 0.0 Amps
Total Demand Load: 59.5 **KVA** 165.2 **Amps**

Notes:

Accessories:

Load Type	Load Description	Connected Loads	Subfed Loads (S)	Total Loads	Demand Factor	Demand Load
G	General (Non-Continuous)	0.00	0.00	0.00	100%	0.00 (KVA Typical)
L	Lighting	0.00	0.00	0.00	125%	0.00
R	Receptacles - to 10 KVA	1.44	0.00	1.44	100%	1.44
	over 10 KVA		0.00	0.00	50%	0.00
K	Kitchen (Non-Dwelling)	0.00	0.00	0.00	100%	0.00
H	Heating	0.00	0.00	0.00	100%	0.00
M	Motors	0.00	0.00	0.00	100%	0.00
LM	Largest Motor	0.00	0.00	0.00	125%	0.00
WH	Water Heater	0.00	0.00	0.00	125%	0.00
C	Continuous General Load	0.00	0.00	0.00	125%	0.00
DL	Multifamily Demand Load (39 Dwelling Units)	207.40	0.00	207.40	28%	58.07
					Total:	59.51 **KVA**

MECHANICAL EQUIPMENT CONNECTION SCHEDULE

ITEM	DESCRIPTION	LOCATION	VOLTS / PHASE	LOAD	MCA	MOCP	WIRE / CONDUIT	CIRCUIT	NOTES
DOAS-1	DUCT HEATER	ROOF	480/3		13.8	20	203	4L2M-1,3,5.	
DOAS-2	DUCT HEATER	ROOF	480/3		13.8	20	203	4L2M-7,9,11.	
RTU-01	ROOFTOP UNIT	ENTRY / ADMIN	480/3		18	20	203	4L2M-2,4,6.	
RTU-02	ROOFTOP UNIT	COMMON AREA	480/3		10	15	203	4L2M-8,10,12.	
RTU-03	ROOFTOP UNIT	NORTH STORAGE	480/3		33	45	403	4L2M-14,16,18.	
RTU-04	ROOFTOP UNIT	SOUTH STORAGE	480/3		18	20	203	4L2M-20,22,24.	
RTU-05	ROOFTOP UNIT	GYM	480/3		18	20	203	4L2M-26,28,30.	
CU-01	CONDENSING UNIT	INTERIOR UNITS	208/1		10	15	202	UNIT PANEL	
FC-01	FAN COIL	INTERIOR UNITS	208/1				202	UNIT PANEL	1
PTHP-01	PACKAGED TERMINAL HEAT PUMP	NORTH UNITS	208/1		14.1	15	202	UNIT PANEL	
PTHP-02	PACKAGED TERMINAL HEAT PUMP	SOUTH UNITS	208/1		19.5	20	202	UNIT PANEL	
PTHP-03	PACKAGED TERMINAL HEAT PUMP	WEST UNITS	208/1		27.6	30	302	UNIT PANEL	

GENERAL MECHANICAL EQUIPMENT CONNECTION SCHEDULE NOTES

A. THE ABOVE INFORMATION IS FOR A SPECIFIC MANUFACTURER. ACTUAL MANUFACTURER FOR EQUIPMENT MAY BE DIFFERENT. COORDINATE WITH MECHANICAL EQUIPMENT SUBMITTALS FOR LOADS AND OVER CURRENT PROTECTION REQUIREMENTS PRIOR TO INSTALLATION OF WIRING.

B. MOCP = MAXIMUM OVER CURRENT PROTECTION
MCA = MINIMUM CIRCUIT AMPACITY

C. PROVIDE DISCONNECTING MEANS FOR EACH ITEM OF EQUIPMENT LISTED IN THE SCHEDULE ABOVE, EXCEPT AS SPECIFICALLY NOTED OTHERWISE IN SCHEDULE NOTES, BELOW.

MECHANICAL EQUIPMENT CONNECTION SCHEDULE NOTES

1 SERVED FROM ASSOCIATED CONDENSING UNIT

WIRE / CONDUIT SCHEDULE

202	2 #12 CU, 1 #12 CU GND., IN 3/4" C.
203	3 #12 CU, 1 #12 CU GND., IN 3/4" C.
302	2 #10 CU, 1 #10 CU GND., IN 3/4" C.
403	3 #8 CU, 1 #10 CU GND., IN 3/4" C.

Panel 'Interior Unit'

120/208V, 1Ph, 3W.; 100A Bus with 70A Main Circuit Breaker Flush Mounted Load Center

2022-1372

Ckt. No.	Description / Location	Load (VA)	Type	C.B. A/Pole	Note	Ph.	Note	C.B. A/Pole	Load (VA)	Type	Description / Location	Ckt. No.
1	R - KITCHEN	1,500	R	20/1		A		15/2	832	M	CU-01 / FC-01	2
3	R - KITCHEN	1,500	R	20/1		C		-	832	M	---	4
5	COOKTOP - KITCHEN	900	K	20/2		A		20/1	66	L	L - LIVING SPACE	6
7	---	900	K	-		C					SPARE	8
9	R - RESTROOM, EXHAUST FAN	360	R	20/1		A					SPARE	10
11	R - LIVING SPACE	1,260	R	20/1		C					SPARE	12
13	BUSSED SPACE					A					BUSSED SPACE	14
15	BUSSED SPACE					C					BUSSED SPACE	16

Connected Load: Ph. A 3,658 VA 30 Amps
Connected Load: Ph. C 4,492 VA 37 Amps
Panel Connected Load: 8.2 KVA 39.2 Amps
Sub-Fed Connected Load: 0.0 KVA 0.0 Amps
Total Demand Load: 8.6 **KVA** 41.3 **Amps**

Panel 'North Unit'

120/208V, 1Ph, 3W.; 100A Bus with 70A Main Circuit Breaker Flush Mounted Load Center

2022-1372

Ckt. No.	Description / Location	Load (VA)	Type	C.B. A/Pole	Note	Ph.	Note	C.B. A/Pole	Load (VA)	Type	Description / Location	Ckt. No.
1	R - KITCHEN	1,500	R	20/1		A		15/2	1,173	M	PTHP-01	2
3	R - KITCHEN	1,500	R	20/1		C		-	1,173	M	---	4
5	COOKTOP - KITCHEN	900	K	20/2		A		20/1	66	L	L - LIVING SPACE	6
7	---	900	K	-		C					SPARE	8
9	R - RESTROOM, EXHAUST FAN	360	R	20/1		A					SPARE	10
11	R - LIVING SPACE	1,260	R	20/1		C					SPARE	12
13	BUSSED SPACE					A					BUSSED SPACE	14
15	BUSSED SPACE					C					BUSSED SPACE	16

Connected Load: Ph. A 3,999 VA 33 Amps
Connected Load: Ph. C 4,833 VA 40 Amps
Panel Connected Load: 8.8 KVA 42.5 Amps
Sub-Fed Connected Load: 0.0 KVA 0.0 Amps
Total Demand Load: 9.4 **KVA** 45.4 **Amps**

Panel 'South Unit'

120/208V, 1Ph, 3W.; 100A Bus with 70A Main Circuit Breaker Flush Mounted Load Center

2022-1372

Ckt. No.	Description / Location	Load (VA)	Type	C.B. A/Pole	Note	Ph.	Note	C.B. A/Pole	Load (VA)	Type	Description / Location	Ckt. No.
1	R - KITCHEN	1,500	R	20/1		A		20/2	1,622	M	PTHP-02	2
3	R - KITCHEN	1,500	R	20/1		C		-	1,622	M	---	4
5	COOKTOP - KITCHEN	900	K	20/2		A		20/1	66	L	L - LIVING SPACE	6
7	---	900	K	-		C					SPARE	8
9	R - RESTROOM, EXHAUST FAN	360	R	20/1		A					SPARE	10
11	R - LIVING SPACE	1,260	R	20/1		C					SPARE	12
13	BUSSED SPACE					A					BUSSED SPACE	14
15	BUSSED SPACE					C					BUSSED SPACE	16

Connected Load: Ph. A 4,448 VA 37 Amps
Connected Load: Ph. C 5,282 VA 44 Amps
Panel Connected Load: 9.7 KVA 46.8 Amps
Sub-Fed Connected Load: 0.0 KVA 0.0 Amps
Total Demand Load: 10.6 **KVA** 50.8 **Amps**

Panel 'West Unit'

120/208V, 1Ph, 3W.; 100A Bus with 70A Main Circuit Breaker Flush Mounted Load Center

2022-1372

Ckt. No.	Description / Location	Load (VA)	Type	C.B. A/Pole	Note	Ph.	Note	C.B. A/Pole	Load (VA)	Type	Description / Location	Ckt. No.
1	R - KITCHEN	1,500	R	20/1		A		30/2	2,296	M	PTHP-03	2
3	R - KITCHEN	1,500	R	20/1		C		-	2,296	M	---	4
5	COOKTOP - KITCHEN	900	K	20/2		A		20/1	66	L	L - LIVING SPACE	6
7	---	900	K	-		C					SPARE	8
9	R - RESTROOM, EXHAUST FAN	360	R	20/1		A					SPARE	10
11	R - LIVING SPACE	1,260	R	20/1		C					SPARE	12
13	BUSSED SPACE					A					BUSSED SPACE	14
15	BUSSED SPACE					C					BUSSED SPACE	16

Connected Load: Ph. A 5,122 VA 43 Amps
Connected Load: Ph. C 5,956 VA 50 Amps
Panel Connected Load: 11.1 KVA 53.3 Amps
Sub-Fed Connected Load: 0.0 KVA 0.0 Amps
Total Demand Load: 12.2 **KVA** 58.9 **Amps**

Panel '4L2M'

277/480V, 3 Ph., 4 W.; 200A Bus with Main Lug Only Surface Mounted Panelboard

2022-1372

Ckt. No.	Description / Location	Load (VA)	Type	C.B. A/Pole	Note	Ph.	Note	C.B. A/Pole	Load (VA)	Type	Description / Location	Ckt. No.
1	DOAS-1	3,058	M	20/3		A		20/3	3,989	M	RTU-01	2
3	---	3,058	M	-		B		-	3,989	M	---	4
5	---	3,058	M	-		C		-	3,989	M	---	6
7	DOAS-2	3,058	M	20/3		A		15/3	2,216	M	RTU-02	8
9	---	3,058	M	-		B		-	2,216	M	---	10
11	---	3,058	M	-		C		-	2,216	M	---	12
13	BUSSED SPACE					A		45/3	7,313	M	RTU-03	14
15	BUSSED SPACE					B		-	7,313	M	---	16
17	BUSSED SPACE					C		-	7,313	M	---	18
19	BUSSED SPACE					A		20/3	3,989	M	RTU-04	20
21	BUSSED SPACE					B		-	3,989	M	---	22
23	BUSSED SPACE					C		-	3,989	M	---	24
25	BUSSED SPACE					A		20/3	3,989	M	RTU-05	26
27	BUSSED SPACE					B		-	3,989	M	---	28
29	BUSSED SPACE					C		-	3,989	M	---	30
31	BUSSED SPACE					A					BUSSED SPACE	32
33	BUSSED SPACE					B					BUSSED SPACE	34
35	BUSSED SPACE					C					BUSSED SPACE	36
37	BUSSED SPACE					A					BUSSED SPACE	38
39	BUSSED SPACE					B					BUSSED SPACE	40
41	BUSSED SPACE					C					BUSSED SPACE	42

Total Connected Load: Ph. A 27,612 VA 100 Amps
Total Connected Load: Ph. B 27,612 VA 100 Amps
Total Connected Load: Ph. C 27,612 VA 100 Amps
Panel Connected Load: 82.8 KVA 99.6 Amps
Sub-Fed Connected Load: 0.0 KVA 0.0 Amps
Total Demand Load: 88.3 **KVA** 106.2 **Amps**

NOTE
ELECTRICAL CONTRACTOR MUST COMPLY WITH ALL
2017 NATIONAL ELECTRICAL / NEW MEXICO
ELECTRICAL / NEW MEXICO ADMINISTRATIVE CODES
&
ELECTRICAL SYSTEMS AND EQUIPMENT SHALL
COMPLY WITH THE 2018 COMMERICAL ENERGY
CONSERVATION CODES FOR NEW MEXICO
NMAC 14.7.9

INTERFACE
ENGINEERING

PROJECT 2022-1135
CONTACT KRISTINE LEAVENS

100 SW Main Street, Suite 1600
Portland, OR 97204
TEL 503.382.2266
www.interfaceengineering.com

ACTIVE
PROFESSIONAL ENGINEER
STATE OF NEW MEXICO CONSTRUCTION INDUSTRIES

JAMES R. SATTEM
27443

Digitally signed by Jim Sattem
Reason: I have reviewed this document.
Date: 2023.05.12 08:33:17-07'00'

HAVEN LIVING
3009 W HISTORIC HWY 66
GALLUP, NM 87301

SHEET TITLE
SCHEDULES - ELECTRICAL

REVISIONS

DRAWN BY KCL
CHECKED BY MKO
JOB NO. 2022-1372
DATE 03/31/2023
SHEET NUMBER
E6.1